SIEMENS

Ingenuity for life

IC1000-F320-A105-V6-4A00

SIMOVAC™ and SIMOVAC-AR™

Medium-voltage controllers instruction manual

usa.siemens.com/simovac

Type SIMOVAC
non-arc-resistant and
type SIMOVAC-AR
arc-resistant controllers

⚠ DANGER

Hazardous voltages and high-speed moving parts.

Will cause death, serious injury or property damage.

Always de-energize and ground the equipment before maintenance. Read and understand this instruction manual before using equipment. Maintenance should be performed only by qualified personnel. The use of unauthorized parts in the repair of the equipment or tampering by unqualified personnel will result in dangerous conditions which will cause death, severe injury or equipment damage. Follow all safety instructions contained herein.

Type SIMOVAC-AR
arc-resistant controllers

⚠ DANGER

Arc flash and explosion hazard.

Will cause death, serious injury or property damage.

No equipment can completely eliminate the risk of arc flash.

SIMOVAC-AR equipment is not arc-resistant unless all of the following conditions are met:

1. All pressure relief devices are free to operate as designed.
2. The fault energy available to the equipment does not exceed the internal arcing short-circuit current rating and rated arcing duration of the equipment.
3. There are no obstructions around the equipment that could direct the arcing exhaust products into an area intended to be protected.
4. The equipment is installed in accordance with the information in the instruction manuals and drawings.

Important
The information contained herein is general in nature and not intended for specific application purposes. It does not relieve the user of responsibility to use sound practices in application, installation, operation, and maintenance of the equipment purchased. Siemens reserves the right to make changes in the specifications shown herein or to make improvements at any time without notice or obligation. Should a conflict arise between the general information contained in this publication and the contents of drawings or supplementary material or both, the latter shall take precedence.

Qualified person
For the purpose of this instruction manual a **qualified person** is one who has demonstrated skills and knowledge related to the installation, construction, and operation of the equipment and the hazards involved. In addition, this person has the following qualifications:

- **Is trained and authorized** to de-energize, clear, ground and tag circuits and equipment in accordance with established safety procedures.
- **Is trained** in the proper care and use of protective equipment, such as: rubber gloves, hard hat, safety glasses or face shields, flash clothing, etc. in accordance with established safety practices.
- **Is trained** in rendering first aid.

Further, a qualified person shall also be familiar with the proper use of special precautionary techniques, personal protective equipment, insulation and shielding materials, and insulated tools and test equipment. Such persons are permitted to work within limited approach of exposed live parts operative at 50 volts or more, and shall, at a minimum, be additionally trained in all of the following:

- The skills and techniques necessary to distinguish exposed energized parts from other parts of electric equipment.
- The skills and techniques necessary to determine the nominal voltage of exposed live parts.
- The approach distances specified in NFPA 70E® and the corresponding voltages to which the qualified person will be exposed.
- The decision-making process necessary to determine the degree and extent of the hazard and the personal protective equipment and job planning necessary to perform the task safely.

Note:
These instructions do not purport to cover all details or variations in equipment, nor to provide for every possible contingency to be met in connection with installation, operation, or maintenance. Should further information be desired or should particular problems arise that are not covered sufficiently for the purchaser's purposes, the matter should be referred to the local sales office.

The contents of this instruction manual shall not become part of or modify any prior or existing agreement, commitment or relationship. The sales contract contains the entire obligation of Siemens Industry, Inc. The warranty contained in the contract between the parties is the sole warranty of Siemens Industry, Inc. Any statements contained herein do not create new warranties or modify the existing warranty.

Instruction manual

Introduction

Type SIMOVAC non-arc-resistant and type SIMOVAC-AR arc-resistant controllers

DANGER

Hazardous voltages and high-speed moving parts.

Will cause death, serious injury or property damage.

Always de-energize and ground the equipment before maintenance. Read and understand this instruction manual before using equipment. Maintenance should be performed only by qualified personnel. The use of unauthorized parts in the repair of the equipment or tampering by unqualified personnel will result in dangerous conditions which will cause death, severe injury or equipment damage. Follow all safety instructions contained herein.

Type SIMOVAC-AR arc-resistant controllers

DANGER

Arc flash and explosion hazard.

Will cause death, serious injury or property damage.

No equipment can completely eliminate the risk of arc flash.

SIMOVAC-AR equipment is not arc-resistant unless all of the following conditions are met:

1. All pressure relief devices are free to operate as designed.
2. The fault energy available to the equipment does not exceed the internal arcing short-circuit current rating and rated arcing duration of the equipment.
3. There are no obstructions around the equipment that could direct the arcing exhaust products into an area intended to be protected.
4. The equipment is installed in accordance with the information in the instruction manuals and drawings.

Introduction
The SIMOVAC family of medium-voltage controller equipment is designed to meet all applicable UL, CSA and NEMA standards.

The type SIMOVAC-AR equipment is classified as arc-resistant and has been tested for resistance to internal arcing in accordance with ANSI/IEEE C37.20.7.

Successful application and operation of this equipment depends as much upon proper installation and maintenance by the user as it does upon the proper design and fabrication by Siemens.

The purpose of this instruction manual is to assist the user in developing safe and efficient procedures for the installation, maintenance and use of the equipment.

Note: This instruction manual does not apply to medium-voltage switchgear or power circuit breakers, which may be provided in the same overall assembly. If the equipment includes switchgear or power circuit breakers, consult the instruction manual applicable to that equipment.

Contact the nearest Siemens representative if any additional information is desired.

Signal words
The signal words “danger,” “warning” and “caution” used in this instruction manual indicate the degree of hazard that may be encountered by the user. These words are defined as:

Danger - Indicates an imminently hazardous situation that, if not avoided, **will** result in death or serious injury.

Warning - Indicates a potentially hazardous situation that, if not avoided, **could** result in death or serious injury.

Caution - Indicates a potentially hazardous situation that, if not avoided, **may** result in minor or moderate injury.

Notice - Indicates a potentially hazardous situation that, if not avoided, **may** result in property damage.

Field service operation and warranty issues
Siemens can provide competent, well-trained field service representatives to provide technical guidance and advisory assistance for the installation, overhaul, repair and maintenance of Siemens equipment, processes and systems. Contact regional service centers, sales offices or the factory for details, or telephone Siemens field service at +1 (800) 333-7421 or +1 (423) 262-5700 outside the U.S.

For medium-voltage customer service issues, contact Siemens at +1 (800) 333-7421 or +1 (423) 262-5700 outside the U.S.

General description

Introduction
The successful performance and application of control equipment depends as much on proper installation and maintenance as it does on good design, proper manufacture and correct application. Siemens type SIMOVAC (indoor or outdoor) controllers and SIMOVAC-AR (indoor only) controllers are precision built equipment designed to function efficiently under normal service conditions. They are designed and manufactured to operate within the parameters established in UL 347, 6th edition (Standard for Medium-Voltage AC Contactors, Controllers and Control Centers) for altitude class 2,000 m equipment.

To provide additional personal protection in the event of an internal arcing fault, the type SIMOVAC-AR indoor equipment is also classified as arc-resistant and has been qualified to carry a type 2B accessibility rating per ANSI/IEEE C37.20.7, when installed with at least 6" (152 mm) clearance between the sides and the rear of the enclosure and any adjacent walls, enclosures or equipment.

Note: Enclosures used to couple type SIMOVAC-AR to other equipment (for instance, transition sections, transformer throats, bus ducts, etc.) as well as specialized vertical sections within a lineup of type SIMOVAC-AR equipment that have not been qualified for resistance to internal arcing, are not considered to be arc-resistant.

The instructions included in this instruction manual are provided to aid you in obtaining longer and more economical service from your Siemens controllers. For proper installation and operation, this information should be distributed to your operators and engineers. By carefully following these instructions, difficulties should be avoided. However, these instructions are not intended to cover all details of variations that may be encountered in connection with the installation, operation and maintenance of this equipment. Should additional information be desired, including replacement instruction manuals, contact your Siemens representative.

Type SIMOVAC-AR arc-resistant controllers

DANGER

Arc flash and explosion hazard.

Will cause death, serious injury or property damage.

No equipment can completely eliminate the risk of arc flash.

SIMOVAC-AR equipment is not arc-resistant unless all of the following conditions are met:

1. All pressure relief devices are free to operate as designed.
2. The fault energy available to the equipment does not exceed the internal arcing short-circuit current rating and rated arcing duration of the equipment.
3. There are no obstructions around the equipment that could direct the arcing exhaust products into an area intended to be protected.
4. The equipment is installed in accordance with the information in the instruction manuals and drawings.

Scope
These instructions cover the installation and the operation and maintenance of Siemens type SIMOVAC indoor and outdoor (non-arc-resistant) and type SIMOVAC-AR indoor (arc-resistant) controller assemblies using fixed-mounted or (optional) horizontal plug-in contactors. SIMOVAC controllers (non-arc-resistant) are also available in non-walk-in outdoor enclosures. The equipment designs described in this instruction manual include configurations for applications up to 7.2 kV. Typical indoor controller assemblies are shown in Figures 1 and 2. All diagrams, descriptions and instructions apply to all of the above classes and designs unless noted otherwise. Standard construction details of the equipment, auxiliary equipment and necessary accessories are given in the appropriate sections. Special mechanical and electrical devices, furnished in accordance with purchase order requirements, are covered by supplementary instructions submitted with this instruction manual.

The equipment furnished has been designed to operate in a system having the circuit capacity specified by the purchaser. If for any reason the equipment is used in a different system or if the short circuit capacity of the system is increased, the ratings of the equipment and the bus capacity must be checked. Failure on the part of the user to receive approval of intended changes from Siemens may cause the warranty to be void.

Note: This instruction manual does not apply to medium-voltage switchgear or power circuit breakers, which may be provided in the same overall assembly. If the equipment includes switchgear or power circuit breakers, consult the instruction manual applicable to that equipment.

Figure 1: Typical SIMOVAC non-arc-resistant controller

Figure 2: Typical SIMOVAC-AR arc-resistant controller

Figure 3: Controller arrangement

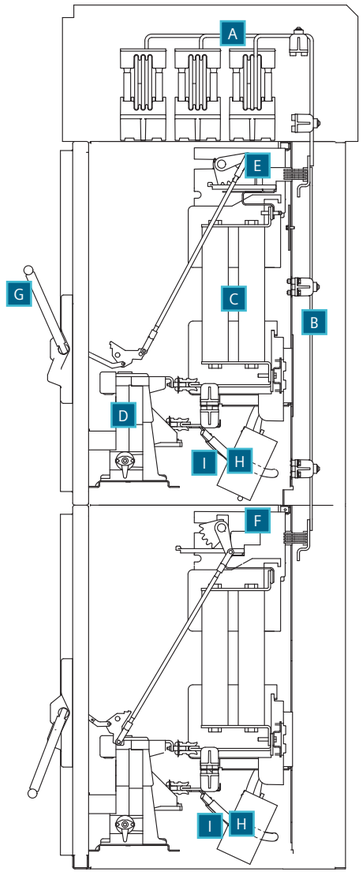

Item	Description
A	Main bus
B	Vertical bus
C	Bolt-in primary fuses
D	12SVC400 contactor (plug-in shown)
E	No-load isolating switch (shown closed)
F	No-load isolating switch (shown open)
G	Isolating switch operating handle
H	Phase current transformers
I	Load cables (internal) to user's terminal pads on left side of compartment

General description

The Siemens SIMOVAC controller is an integrated system of contactors and components arranged for convenient access within a common enclosure consisting of one or more free-standing structural sections.

SIMOVAC indoor sections are normally 36" (914 mm) wide, 30" (762 mm) deep and 95" (2,413 mm) tall (for 4,000 A main bus, add 7.25" (184 mm) to the height), while SIMOVAC-AR indoor sections are normally 36" (914 mm) wide, 40" (1,016 mm) deep and 112" (2,845 mm) tall) as shown in Figures 4 and 5 on page 9.

1,200 A load-interrupter switch sections are similar but are usually 48" (1,218 mm) wide.

Outdoor controllers are similar except width increases 6" (152 mm) per section, height increases to 107.3" (2,725 mm), and depth increases to 37.4" (950 mm).

The controllers can be arranged to meet specific customer needs and can be configured to accept up to two starters per vertical section as shown in Figure 3.

The modular compartments of the section may contain starters, low-voltage/control devices or space for future starters.

In general, each starter unit is divided into medium voltage and low-voltage/control compartments each with its own door, and has the following features:

- The low-voltage/control compartment is isolated from the medium-voltage compartment of the section with grounded metal barriers and provides ample space for relays, terminal blocks and other control circuit elements.
- The medium-voltage compartment contains the vacuum contactor, primary fuses, current and voltage transformers (optional), a control power transformer (if applicable), a no-load isolating switch, load connections, and has space for optional surge protection devices such as surge limiters. (Refer to Figure 6 on page 10).

Figure 4: Typical SIMOVAC non-arc-resistant controller configurations[2, 3, 4]

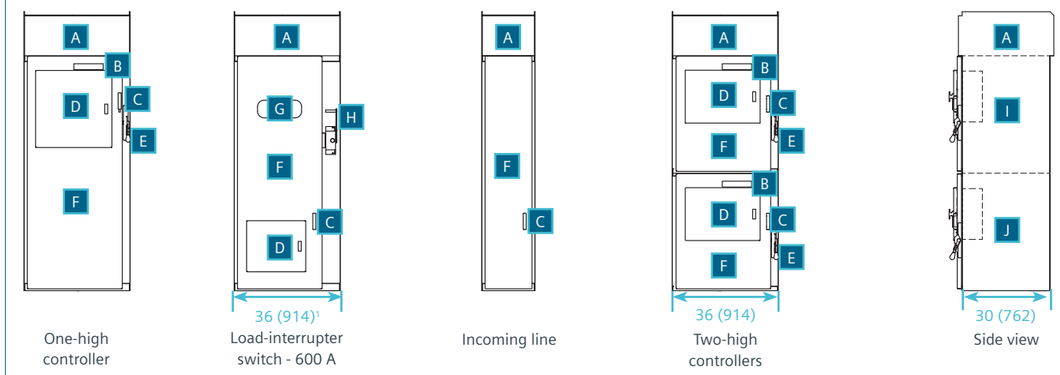

Item	Description	Item	Description	Item	Description
A	Main bus compartment	E	Isolating switch handle	I	Upper controller compartment
B	Isolating switch blade viewing window	F	High-voltage door	J	Lower controller compartment
C	High-voltage door handle	G	Interrupter switch blade viewing window		
D	Low-voltage door	H	Interrupter switch handle		

Figure 5: Typical SIMOVAC-AR arc-resistant controller configurations

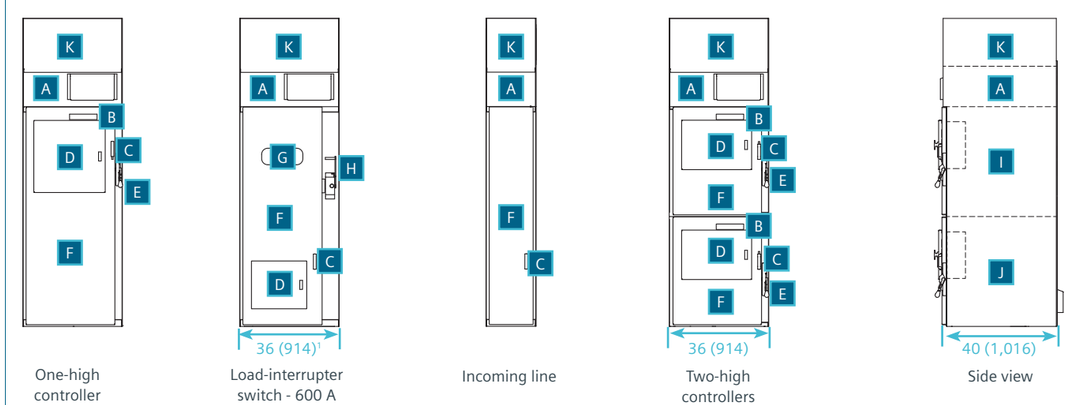

Item	Description	Item	Description	Item	Description
A	Main bus compartment	E	Isolating switch handle	I	Upper controller compartment
B	Isolating switch blade viewing window	F	High-voltage door	J	Lower controller compartment
C	High-voltage door handle	G	Interrupter switch blade viewing window	K	Pressure relief channel
D	Low-voltage door	H	Interrupter switch handle		

Footnotes:

1. 600 A load-interrupter switches are 36" (914 mm) wide. 1,200 A switches are 48" (1,218 mm) wide.
2. For outdoor non-arc-resistant configurations, add 6" (151 mm) per section.
3. Refer to Annex A beginning on page 110 for information on SSRVS controllers.
4. Refer to Annex B beginning on page 115 for information on RVAT controllers.

Item	Description
A	Isolating switch operating handle
B	Primary current-limiting fuses
C	Contactor
D	Phase current transformers
E	Ground sensor transformer
F	Primary fuses for control power transformer
G	Control power transformer
H	Outgoing cable terminations (with optional ball-type ground studs)
I	Optional voltage transformers

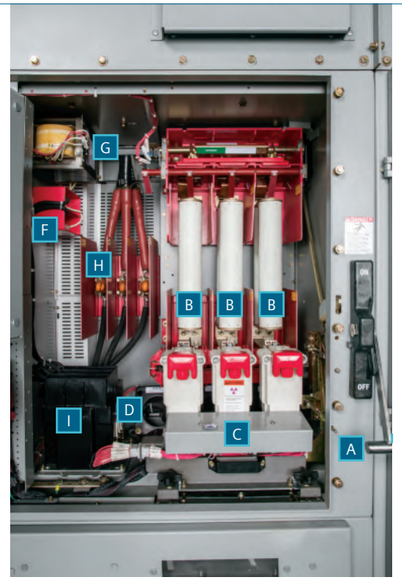

12SVC400

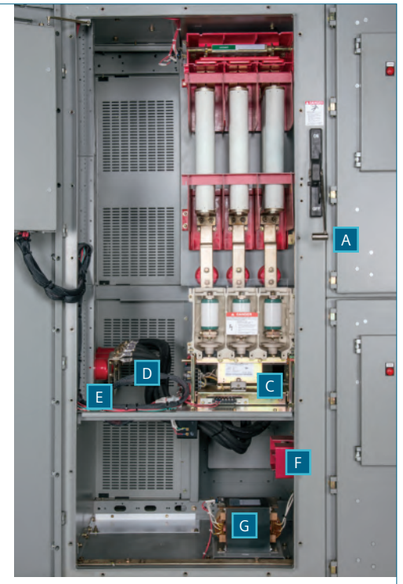

12SVC800

Figure 6: Typical controller compartments

To provide personnel safety, the medium-voltage compartment door is mechanically interlocked with the critical circuit elements inside the compartment. In order to unlatch and open the medium-voltage unit door, the contactor must be de-energized and the isolating switch must be in the OFF position. In the OFF position, the load-side terminals of the isolating switch are connected to ground. Also, in order to energize the contactor or move the switch to the ON position, the medium-voltage door must be closed and latched. The low-voltage/control compartment door may be opened or closed without disconnecting the power.

In addition to these compartments, each section (except for single-section assemblies) has a main bus compartment to house the horizontal bus which extends the entire length of the controller. This compartment is located in the upper portion of the section and provides easy access for the horizontal bus to distribute the electrical power within the controller. Each vertical section containing provisions for contactors is fed by a vertical bus system, which is connected to the horizontal bus.

The vertical bus system in turn supplies power through the stab assembly on the isolating switch. The horizontal and vertical bus system is isolated from the front by means of barriers.

In single-section controllers, having no main horizontal bus, the incoming connections can be located in the normal main bus area at the top of the section.

Additionally, the type SIMOVAC-AR equipment is classified as arc-resistant, as defined in ANSI/IEEE C37.20.7, and has additional features added to the basic design that have been qualified via testing to carry a type 2B accessibility rating. These arc-resistant features provide an additional degree of protection to personnel in close proximity to the equipment in the event of an internal arcing fault while the equipment is operating under normal conditions.

The enclosure withstands the pressures and elevated temperatures of an internal arcing fault and directs the hot gases and burning particulates into the top-mounted pressure relief channel (PRC). These arc by-products are then vented to the outside environment through an exhaust plenum system.

In cases where a transition section is used to close couple SIMOVAC-AR controllers to Siemens type GM-SG-AR medium-voltage switchgear, the hot gases and burning particulates are directly exhausted into a common PRC for both SIMOVAC-AR controllers and GM-SG-AR switchgear, before being vented to the outside through a common exhaust plenum. Figure 7 shows an exhaust plenum for a SIMOVAC-AR lineup and for a SIMOVAC-AR section connected to type GM-SG-AR switchgear section with a transition section. This figure depicts the exhaust plenum connected to the front, but the plenum may be connected to either side or to the rear.

Normal conditions include those conditions defined in clause 2.1 of UL 347, 6th edition for altitude class 2,000 m equipment for SIMOVAC (non-arc-resistant) and SIMOVAC-AR (arc-resistant) equipment.

For SIMOVAC-AR equipment, the following additional conditions apply and are intended to maintain the integrity of the equipment during an internal arcing fault event:

1. All doors and panels providing access to primary compartments must be closed and properly secured (all bolts installed and tightened, all latches in latched position.)
2. All pressure relief devices must be free to operate as designed.
3. The top mounted pressure relief channel (PRC) and exhaust plenum assemblies must be properly installed.

Important: Exhaust plenum must be routed outside the equipment room and to an area where personnel will not be present when the equipment is energized.

4. The fault energy available to the equipment must not exceed the internal arcing short-circuit current rating and rated arcing duration of the equipment.

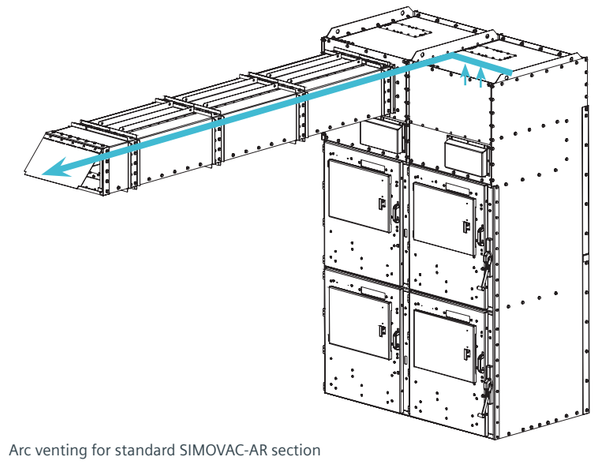

Arc venting for standard SIMOVAC-AR section

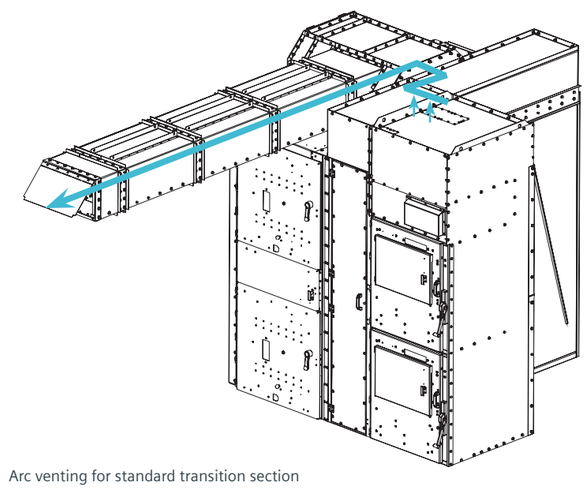

Arc venting for standard transition section

Figure 7: Typical exhaust plenum

5. There must be no obstructions around the equipment that could direct the arcing exhaust products into an area intended to be protected.
6. The equipment must be properly grounded.
7. All equipment must be properly installed in accordance with information in instruction manuals and drawings.
8. All primary and secondary cable entrance covers supplied with the controller must be properly reinstalled after drilling to allow for cable entry.

The type SIMOVAC-AR indoor arc-resistant controller has been qualified to carry a type 2B accessibility rating, as defined in ANSI/IEEE C37.20.7, when installed with at least 6" (152 mm) clearance between the sides and rear of the controller and any adjacent walls, enclosures or equipment.

Note: NFPA 70® (NEC®) may require greater clear working space.

Note: Enclosures used to couple type SIMOVAC-AR controllers to other equipment (for example, transition sections, transformer throats, bus ducts, etc.) as well as specialized vertical sections within a lineup of type SIMOVAC-AR equipment that have not been qualified for resistance to internal arcing are not considered to be arc-resistant.

Surge protection
SIMOVAC controllers with type 12SVC400 and 12SVC800 vacuum contactors are suitable for application without protection from surges related to switching with vacuum, except for jogging or inching duty with small (under 100 HP) motors. For such applications, metal-oxide surge arresters or surge limiters should be specified.

Regardless of the switching means employed, if the insulation integrity of the motor is suspect, such as for older machines, it may be desirable to add surge protection for the machine, or to consider upgrading the machine to modern insulation standards.

Ratings
The SIMOVAC controller assemblies are rated in accordance with Table 2 on page 13, and as shown on the nameplate on the enclosure.

SIMOVAC controllers use both the type 12SVC400 (400 A) and 12SVC800 (720 A) contactors. The contactors are rated in accordance with Table 3 on page 13, and as shown on the rating labels on the contactors. The type 12SVC400 contactors can be used with either single or double barrel fuses (2R-24R or 10E-450E) and can be installed in either a one- or two-high compartment arrangement. The type 12SVC800 contactor can only be installed in one-high controllers.

Operating environment
The SIMOVAC family of controllers conforms to the provisions in clause 2.1 of UL 347, 6th edition for altitude class 2,000 m equipment, which defines the usual service conditions for electromagnetic control. The controller is capable of carrying its rated load when the ambient temperature does not exceed 40 °C (104 °F) and the altitude does not exceed 2,000 m (6,600 feet) above sea level. Where unusual service conditions exist, or where temperature or altitude limitations are exceeded, the controller construction, ratings, or protection may require alteration. Some examples of unusual service conditions are excessive moisture, vibration, dust, or corrosive atmospheres. In these cases, contact your Siemens representative.

SIMOVAC controllers are available in the following types shown in Table 1.

Table 1: SIMOVAC controller types

Type	Enclosure types	
SIMOVAC (non-arc-resistant)	Indoor	Type 1 (non-gasketed)
		Type 2 (drip resistant)
		Type 12 (dust tight)
	Outdoor	Type 3R
SIMOVAC-AR (arc-resistant)	Indoor	Type 1 (non-gasketed)

Table 2: Controller assembly ratings

Maximum voltage	Short-circuit current class E2[2]	Insulation level (impulse)[3]	Main bus continuous current[1, 4]	Short-time current duration (main bus)	Internal arc resistance (SIMOVAC-AR only)
kV	kA	kV	A		
5.0	63[5]	60	1,200, 2,000, 3,000, 4,000[6]	10 cycles (2 seconds optional)	Accessibility type 2B 0.5 seconds
7.65	63[5]	60	1,200, 2,000, 3,000, 4,000[6]	10 cycles (2 seconds optional)	Accessibility type 2B 0.5 seconds

Footnotes:
1. All main bus ratings are on a self-cooled, ventilated basis.
2. Short-time duration for controllers without main bus is limited to contactor capability (with fuses).
3. Insulation level is for the controller, with inductive transformers disconnected for testing.
4. Type 12 up to 2,000 A. Type 3R up to 3,000 A.
5. 50 kA with some contactor/fuse combinations (refer to pages 74-76).
6. 4,000 A is available for type 1 only.

Table 3: Contactor/controller ratings

System voltage	Vacuum contactor	Enclosed continuous ampere rating[1]	Interrupting capacity		Motor horsepower rating (three phase)				Transformer loads[2]	
			Unfused class E1	Fused class E2	Synchronous motors		Induction motors	Maximum motor fuse rating	Maximum three phase	Maximum fuse rating
kV	Type	A	kA	kA	0.8 PF	1.0 PF	HP		kVA	
2.3	12SVC400	400	4.8	63[3]	1,500	1,750	1,500	24R[3]	1,500	450E[6]
2.3	12SVC800	720	7.2	63[4]	3,000	3,500	3,000	57X[4]	2,500	900E
4.0	12SVC400	400	4.8	63[3]	2,500	3,000	2,500	24R[3]	2,500	450E[6]
4.0	12SVC800	720	7.2	63[4]	5,500	6,000	5,500	57X[4]	5,000	900E
4.6	12SVC400	400	4.8	63[3]	3,000	3,500	3,000	24R[3]	3,000	450E
4.6	12SVC800	720	7.2	63[4]	6,000	7,000	6,000	57X[4]	5,000	900E
6.9	12SVC400	400	4.8	63[5]	4,000	5,000	4,000	18R[5]	3,750	400E[6]-18R
6.9	12SVC800	720	7.2	63[4]	8,000	10,000	8,000	57X[4]	4,000-6,000	750E-57X[4]

Footnotes:
1. Refer to Table 4 for further detail.
2. Based on self-cooled transformer rating.
3. With 24R fuse, interrupting capacity is 50 kA.
4. With 48X or 57X fuse, interrupting capacity is 50 kA.
5. Maximum fuse is 18R.
6. Fuse shown will not permit transformer forced-cooled rating of 133 percent of self-cooled rating.

Table 4: Controller maximum current ratings

Controller type	Type 1 non-arc-resistant; Type 2 non-arc-resistant; Type 3R outdoor non-arc-resistant	Type 1 arc-resistant	Type 12 non-arc-resistant
Two-high compartment with 12SVC400 controller	340 A top	340 A top	340 A top
	400 A bottom	400 A bottom	380 A bottom
One-high compartment with 12SVC400 controller	400 A top or bottom	400 A top or bottom	380 A top or bottom
One-high compartment with 12SVC800 controller	720 A	720 A	630 A

Table 5: 12SVC400 contactor operating data

Item	Magnetically held	Latched
Rated voltage	7,200 V[5]	7,200 V[5]
Rated current	400 A	400 A
Permissible switching frequency	300/hour	300/hour
Mechanical life (number of operations)	750,000	150,000
Electrical life (number of operations)	400,000	400,000[6]
Closing time (average)	40 ms	40 ms
Minimum closing command duration	----	100 ms
Opening time (average)[2]	90 ms	90 ms
Arcing time	10 to 20 ms	10 to 20 ms
Pick-up voltage ac or dc, nominal	85%	85%
Drop-out voltage ac or dc, nominal	70%	----
Minimum trip voltage	----	85% rated voltage
Rated control voltage	115 Vac/240 Vac; 125 Vdc/250 Vdc	115 Vac/240 Vac; 125 Vdc/250 Vdc
Coil circuit inrush	600 VA (ac)	600 VA (ac)
Coil circuit holding	7 VA (ac); 0.47 A (dc)	----
Tripping (latched opening release)	----	6.5 A
Auxiliary contact arrangement	3 NO + 3 NC	1 NO + 1 NC
Auxiliary relay contact rating	10 A, 600 V (NEMA class A600)	10 A, 600 V (NEMA class A600)
■ Continuous current	■ 10 A	■ 10 A
■ AC making/breaking	■ 7,200 VA not over 60 A/720 VA not over 6 A	■ 7,200 VA not over 60 A/720 VA not over 6 A
■ DC making/breaking	■ 10 A@24 V; 5 A@110 V; 0.9 A@125 V	■ 10 A@24 V; 5 A@110 V; 0.9 A@125 V
Maximum interrupting current (three operations)	4.8 kA	4.8 kA
Short-time current (rms)		
■ 30 seconds	■ 2,400 A	■ 2,400 A
■ 1 second	■ 6,000 A	■ 6,000 A
Standard service altitude	Up to 2,000 m (6,562 ft) above sea level	Up to 2,000 m (6,562 ft) above sea level
Optional service altitude	[1]	[1]
BIL	60 kV[4]	60 kV[4]
Dielectric strength (60 Hz)	[3]	[3]
Control voltages ac and dc	120/240 Vac and 125/250 Vdc	120/240 Vac and 125/250 Vdc
Control voltage options (latched opening release)	----	125 Vdc

Footnotes:
1. Consult factory
2. Opening time = time from instant of application of the OPEN control pulse (for latched version) or removal of control power (for magnetically held version) to the instant of contact separation.
3. 2.0 kV + (2.25 x rated voltage) = 18.2 kV for 7.2 kV rated voltage.
4. Phase-ground and phase-phase, with vacuum contactor closed.
5. Maximum operating voltage 7.65 kV.
6. With latch replacement at 150,000 and 300,000.

Table 6: 12SVC800 contactor operating data

Item	Magnetically held	Latched
Rated voltage	7,200 V[5]	7,200 V[5]
Rated current	720 A	720 A
Permissible switching frequency	600/hour	300/hour
Mechanical life (number of operations)	1,000,000	200,000
Electrical life (number of operations)	200,000	200,000
Closing time (average)	80 to 100 ms	80 to 100 ms
Minimum closing command duration	----	100 ms
Opening time (average)[4]	40 to 45 ms	40 to 45 ms
Arcing time	10 ms or less	10 ms or less
Pick-up voltage ac or dc, nominal	85% rated (hot); 70% rated (cold)	85% rated (hot); 70% rated (cold)
Drop-out voltage ac or dc, nominal	50% rated (hot); 40% rated (cold)	----
Minimum trip voltage	----	85% rated voltage
Rated control voltage	115 Vac/240 Vac; 125 Vdc/250 Vdc	115 Vac/240 Vac; 125 Vdc/250 Vdc
Coil circuit inrush	800 VA	875 VA
Coil circuit holding	48 VA	----
Tripping (latched opening release)	----	600 W
Auxiliary contact arrangement	3 NO + 3 NC	2 NO + 2 NC
Auxiliary relay contact rating	10 A, 600 V (NEMA class A600)	10 A, 600 V (NEMA class A600)
■ Continuous current	■ 10 A	■ 10 A
■ AC making/breaking	■ 7,200 VA not over 60 A/720 VA not over 6 A	■ 7,200 VA not over 60 A/720 VA not over 6 A
■ DC making/breaking	■ 60 W (L/R 150 ms)	■ 60 W (L/R 150 ms)
Maximum interrupting current (three operations)	7.2 kA	7.2 kA
Short-time current (rms)		
■ 30 seconds	■ 4,320 A	■ 4,320 A
■ 1 second	■ 10,800 A	■ 10,800 A
Standard service altitude	<1,000 m	<1,000 m
Optional service altitude	[2]	[2]
BIL	60 kV[3]	60 kV[3]
Dielectric strength (60 Hz)	[1]	[1]
Control voltages ac and dc	120/240 Vac and 125/250 Vdc	120/240 Vac and 125/250 Vdc
Control voltage options (latched opening release)	----	125 Vdc

Footnotes:
1. 2.0 kV + (2.25 x rated voltage) = 18.2 kV for 7.2 kV rated voltage.
2. Consult factory.
3. Phase-ground and phase-phase, with vacuum contactor closed.
4. Opening time = time from instant of application of the OPEN control pulse (for latched version) or removal of control power (for magnetically held version) to the instant of contact separation.
5. Maximum operating voltage 7.65 kV.

Receiving, handling and storage

Receiving
Each group of type SIMOVAC controllers is securely blocked and braced for shipment. It is wrapped, boxed or covered as required by shipping conditions. If special handling is required, it is so indicated. Relatively delicate instruments, relays and other devices are included, and the controller assembly must be handled carefully when unloading.

Identification
When the shipment includes more than one shipping group or equipment for more than one location, marking tags are attached to each crate or package for identification. The sales order number on the tag is also on the shipping list. The shipping list identifies the contents with the unit numbers included in the shipping group. Refer to the general arrangement drawing for the location of each unit within the group lineup. Use this information to simplify the assembly operation and save unnecessary handling.

Inspection and unpacking
Inspect the equipment as soon as possible after receipt for any damage that may have occurred in transit. Before unpacking, examine the package itself, as a damaged package may indicate damage to the contents of the package. Be careful when unpacking equipment. The use of sledge hammers and crowbars may damage the finish, or the equipment itself and may void the warranty. Use nail pullers. After unpacking, examine equipment for any possible damage. Check the shipping manifest to be certain that all items have been received.

Note: If there is a shortage, make certain it is noted on the freight bill and contact the carrier immediately. Notify Siemens medium-voltage customer service at +1 (800) 333-7421 (+1 (423) 262-5700 outside the U.S.) of any shortage or damage.

Shipping damage claims
Important: The manner in which visible shipping damage is identified by consignee prior to signing the delivery receipt can determine the outcome of any damage claim to be filed.

Notification to carrier within 15 days for concealed damage is essential if loss resulting from unsettled claims is to be eliminated or minimized.

1. When shipment arrives, note whether equipment is properly protected from the elements. Note trailer number on which the equipment arrived. Note blocking of equipment. During unloading, make sure to count the actual items unloaded to verify the contents as shown on the delivery receipt.
2. Make immediate inspection for visible damage upon arrival and prior to disturbing or removing packaging or wrapping material. This should be done prior to unloading when possible. When total inspection cannot be made on vehicle prior to unloading, close inspection during unloading must be performed and visible damage noted on the delivery receipt. Take pictures if possible.
3. Any visible damage must be noted on the delivery receipt and acknowledged with the driver's signature. The damage should be detailed as much as possible. It is essential that a notation "possible internal damage, subject to inspection" be included on delivery receipt. If the driver will not sign the delivery receipt with damage noted, the shipment should not be signed for by the consignee or their agent.
4. Notify Siemens immediately of any damage, at +1 (800) 333-7421 or +1 (423) 262-5700 outside the U.S.
5. Arrange for a carrier inspection of damage immediately.

Important: Do not move equipment from the place it was set when unloading. Also, do not remove or disturb packaging or wrapping material prior to carrier damage inspection. Equipment must be inspected by carrier prior to handling after receipt. This eliminates loss due to claims by carrier that equipment was damaged or further damaged on site after unloading.

6. Be sure equipment is properly protected from any further damage by covering it properly after unloading.
7. If practical, make further inspection for possible concealed damage while the carrier's inspector is on site. If inspection for concealed damage is not practical at the time the carrier's inspector is present, it must be done within 15 days of receipt of equipment. If concealed damage is found, the carrier must again be notified and inspection made prior to taking any corrective action to repair. Also notify Siemens immediately at +1 (800) 333-7421 or +1 (423) 262-5700 outside the U.S.
8. Obtain the original of the carrier inspection report and forward it along with a copy of the noted delivery receipt to Siemens at +1 (800) 333-7421 or +1 (423) 262-5700 outside the U.S. Approval must be obtained by Siemens from the carrier before any repair work can be performed. Before approval can be obtained, Siemens must have the above referenced documents. The carrier inspection report and/or driver's signature on the delivery receipt does not constitute approval to repair.

Note: Shipments are not released from the factory without a clear bill of lading. Approved methods are employed for preparation, loading, blocking and tarping of the equipment before it leaves the Siemens factory. Any determination as to whether the equipment was properly loaded or properly prepared by shipper for over-the-road travel cannot be made at the destination. If the equipment is received in a damaged condition, this damage to the equipment must have occurred while en route due to conditions beyond Siemens control. If the procedure outlined above is not followed by the consignee, purchaser or their agent, Siemens is not held liable for repairs. Siemens is not held liable for repairs in any case where repair work was performed prior to authorization from Siemens.

Figure 8: Lifting indoor SIMOVAC arc-resistant and non-arc-resistant controllers with a crane

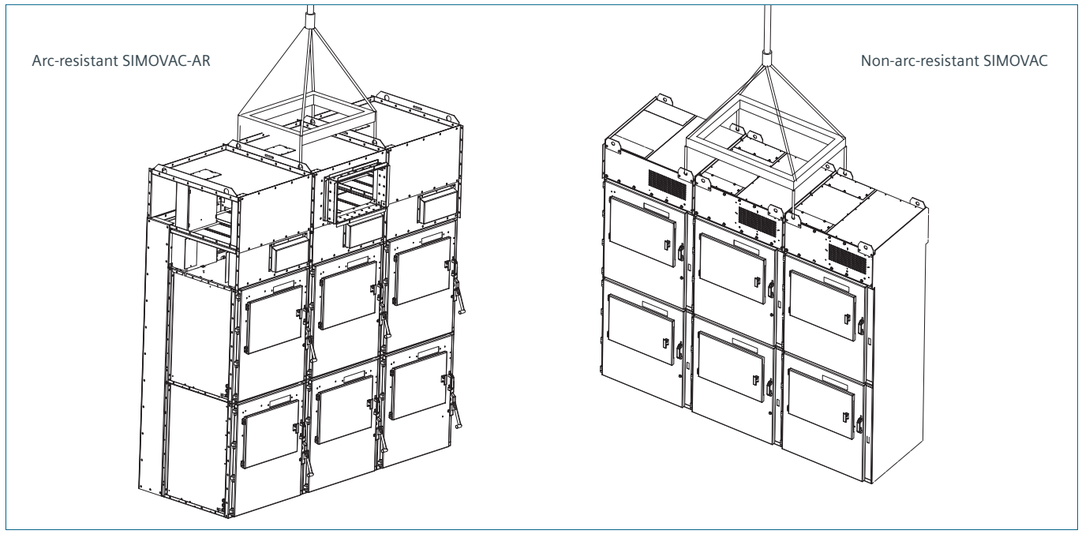

⚠ WARNING

Heavy weight.

Can result in death, serious injury or property damage.

Use extreme care when handling the motor controller.

Indoor equipment handling

There are a number of methods that can be used in handling SIMOVAC controllers that, when properly employed, will not damage the equipment. The handling method used will be determined by conditions and available equipment at the installation site. Before removing the protective packing materials, the controllers may be moved by crane with lift cables attached through the packaging to the lifting plates on the top of the equipment.

Lifting with a crane is the preferred method of handling; however, overhead obstructions or low ceilings often dictate that other methods must be used. If crane facilities are unavailable, or if tight spaces prevent use of a crane, rollers, jacks or forklift trucks under the wooden shipping skids may be used.

Indoor SIMOVAC controllers are shipped in groups of one to four vertical sections mounted on wooden shipping skids and wrapped, boxed or covered. Each group has provisions for attaching lifting equipment as shown in Figure 8 at the ends and at the joint between each section. Though the lift points vary in location depending upon the number of sections in a shipping group, all are designed for use with a crane of adequate height and capacity. To estimate the maximum required crane capacity, multiply the number of sections to be lifted by 2,800 lbs (1,270 kg).

A drawing pocket (or holder) is provided with each lineup of controllers. This drawing pocket includes a general arrangement drawing of the equipment, plus information on handling and installing the equipment. The drawing pocket is normally located at the left end of the lineup. Review this information carefully before moving the equipment.

The following precautions must be taken whenever moving a motor controller:

1. Handle the controller with care to avoid damage to components and to the frame or its finish.
2. Do not remove the wooden shipping skid until final installation position is reached.
3. Handle the motor controller in an upright position only. Motor controllers are normally front heavy, and frequently top heavy. Balance the load carefully and steady the motor controller, if necessary, during movement. Some motor controllers may contain heavy equipment, such as transformers or reactors, which can be adversely affected by tilting.
4. Know the capabilities of the moving means available to handle the weight of the motor controller. Adequate handling facilities should be available. If a vertical section contains power factor correction capacitors, reactors, or large transformers, sufficient additional weight handling capacity must be allowed.
5. It is recommended that a crane or hoist be used to handle the controller if at all possible. If a crane or hoist is not available, and other handling means are necessary, extreme care must be exercised to insure that the equipment is secured during the movement and placement operations to prevent tipping and falling. Jacks, pry bars, dollies, roller lifts, and similar devices all require supplemental blocking beneath the motor controller, and restraints to prevent tipping. **These devices are not recommended due to the hazards implicit in their use.**

Lifting and moving indoor controllers with a crane

The recommended lifting method for SIMOVAC controllers is by means of lifting cables connected to an overhead crane. The lifting cables should be connected to the eyes in the top lifting plates using properly rated shackles.

One set of holes is located at the front of the controller, while another set of holes is located at the rear, as illustrated in Figure 8 on page 18. A crane with sufficient height should be used so the load angle (from horizontal) on the lifting cables will be at least 45 degrees when viewed from the front or the rear. A lesser angle could cause the equipment to be damaged and will require the lifting cables to have spreaders from front-to-rear and side-to-side to prevent twisting the lift plates.

The following precautions should be taken when moving the controller with a crane or hoist:

1. Select rigging lengths to compensate for any unequal weight distribution.
2. Do not allow the angle between the lifting cables and vertical to exceed 45 degrees.
3. Do not pass ropes or cables through the lifting holes. Use only slings with safety hooks or shackles.
4. If overhead restrictions do not permit lifting by top mounted brackets, or angles, the controller may be under slung from the base. The sling load must be distributed evenly and padding or spreader bars must be used to avoid scarring and structural damage.

Note: Never lift the controller above an area where personnel are located.

⚠ WARNING

Heavy weight.

Can result in death, serious injury or property damage.

Observe all handling instructions in this instruction manual to prevent tipping or dropping of equipment.

Figure 9: Moving indoor SIMOVAC arc-resistant and non-arc-resistant controllers with jacks and rollers

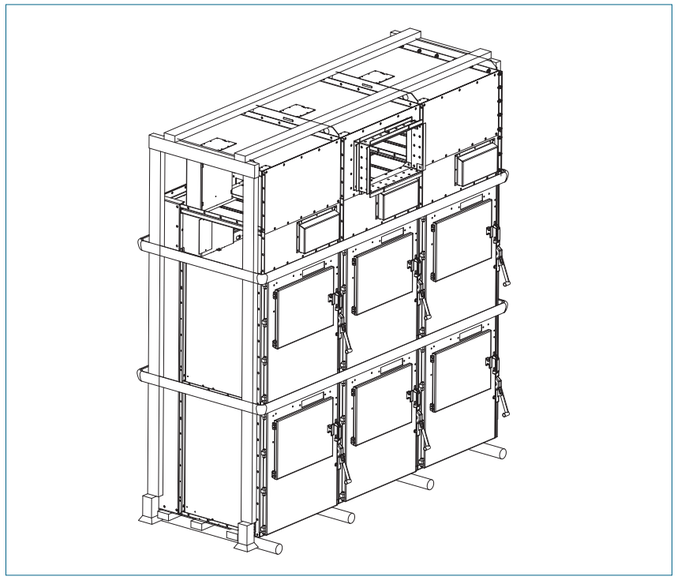

⚠ WARNING

Heavy weight.

Can result in death, serious injury or property damage.

Use extreme care when handling the motor controller.

Moving indoor controllers in obstructed areas without a crane

Within buildings and obstructed areas, where a crane cannot be used, move the controller with rollers, cribbing, jacks and other such equipment as may be required to meet the situation. Forklift trucks should be used with discretion as improper lift points could cause extreme damage to equipment. For this reason, **use of a forklift truck to handle or move controllers is not recommended.** Jacks may be used to lift equipment that is properly supported by sturdy timbers. To prevent distortion of the sections, rollers and cribbing of equal height must be used in sufficient number to evenly distribute the load. Figure 9 shows a method of using jacks on SIMOVAC controllers to facilitate the use of rollers under the shipping skid. Care must be used to prevent damage to instruments, relays and devices, and to maintain the stability of the timbers. Remove rollers and lower the controller carefully. Leave wooden skids (when provided) in place during moving operation until final location is reached.

The following precautions should be taken when moving the controller by rolling on pipes:

1. Keep the controller in an upright position.
2. Use enough people and restraining devices to prevent tipping.
3. The surface over which the controller is to be rolled must be level, clean, and free of obstructions.

Never roll a controller on an inclined surface.

4. It should be recognized that rolling a controller is especially hazardous to fingers, hands, and feet and the controller is susceptible to tipping. Measures should be taken to eliminate these hazards.
5. All pipes must be the same outside diameter and should have no flat spots. Only steel pipe should be used for this purpose.

The following precautions should be taken when moving the controller with a forklift:

1. Keep the controller in an upright position only.
2. Make sure the load is properly balanced on the forks.
3. Place protective material between the controller and forklift to prevent bending and scratching.
4. Securely strap the controller to the forklift to prevent shifting or tipping.
5. Excessive speeds and sudden starts, stops, and turns must be avoided when handling the controller.
6. Lift the controller only high enough to clear obstructions on the floor.
7. Take care to avoid collisions with structures, other equipment, or personnel when moving the controller.

Never lift the controller above an area where personnel are located.

Lifting outdoor controllers with crane

The method of lifting outdoor equipment is shown in Figure 10: Lifting outdoor controller with crane. The load angles (from horizontal) on the lifting cables, as viewed from the front or rear, must be at least 45 degrees. A lesser angle could damage the equipment. The lifting cables must have spreaders front-to-back and side-to-side to protect the equipment.

The recommended lifting pipe size (Ref. ASTM A-53) is type XXS 2-1/2" nominal (2.875" (73 mm) OD, 1.771" (45 mm) ID). The lifting pipe should be at least 24" (610 mm) longer than the depth of the controller and should include adequate means to prevent the lifting cables from slipping off of the lifting pipe during use.

⚠ WARNING

Heavy weight.

Can result in death, serious injury or property damage.

Observe all handling instructions in this instruction manual to prevent tipping or dropping of equipment.

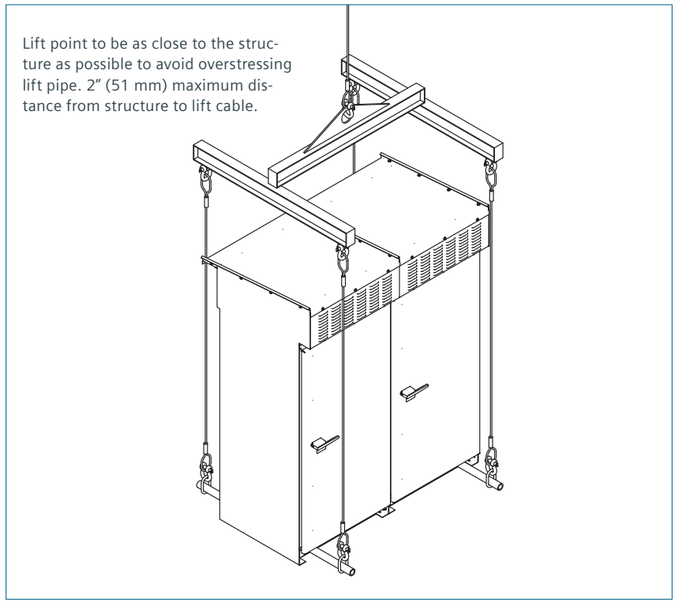

Figure 10: Lifting outdoor controller with crane

Final movement of controller assembly
Skid removal should be performed just prior to final placement of the controller and is achieved by removing the skid lag bolts. Do this by first attaching a crane or suitable lifting device to the lifting plates and then hoist the controller to remove all slack without lifting the equipment. This is a recommended safety measure to reduce the possibility of tipping. The lag bolts may now be removed, the controller can be lifted and the skids removed.

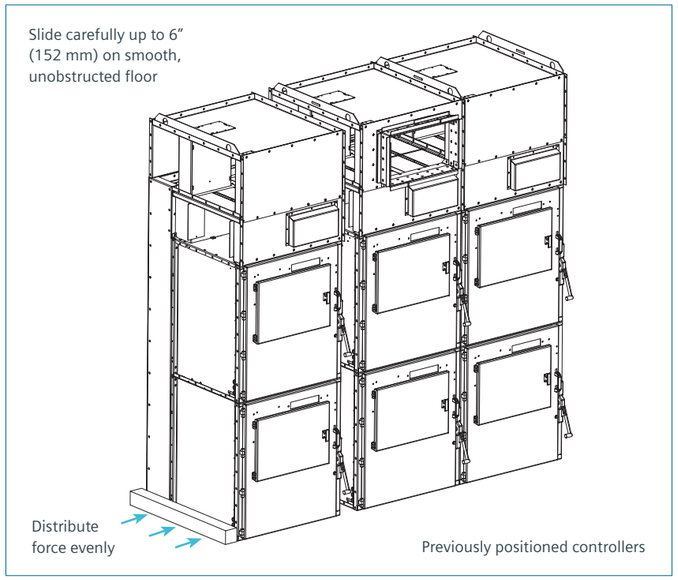

Figure 11: Moving indoor SIMOVAC controllers in obstructed areas without crane final positioning

Proper final movement and connection of the controller requires that several items be completed (refer to Figure 11):

1. Preplan the sequence of installation movements and connections.
2. Where equipment must be slid into final location, start with an end shipping group and continue in sequence. Secondary conduits which stub-up above floor level may block sliding.
3. Protect equipment and external items (for example, instruments, relays, etc.) from damage during movement.
4. Be sure to have smooth, unobstructed surfaces where the equipment is to be slid.
5. Keep access openings clear.
6. Prepare for the connections across shipping splits before the equipment is moved into final position. Bus joint boots (if applicable) should be removed using side, and front access options as required. Note the mounting position and orientation and save hardware for use in reinstallation.
7. Thread coiled wires across shipping splits into inter-unit wire trough prior to moving equipment into its final position.

Once the controller is in its final position, the controller can be lowered into place, and the anchor bolts secured.

Note: This operation should be performed with adequate rigging tension to prevent tipping.

After all additional shipping sections are secured in a similar manner, sections and bus bars should be joined in accordance with instructions in the installation section of this instruction manual. Close all doors and panels as soon as possible to eliminate entrance of dirt and foreign materials into the controller enclosure.

Storage - indoor controllers
When a controller is not to be installed immediately, it should be unpacked, inspected within 15 days of receipt and stored in a clean dry location. Preferably, it should be stored in a heated building, with adequate air circulation, and protected from mechanical damage, dirt and water. If it is to be kept in a humid or unheated area, provide an adequate covering and place a heat source of approximately 150 watts output within each vertical section to prevent condensation

If the motor controller is to be stored for any length of time prior to installation, leave the packing intact until the motor controllers are at their final installation position. If the packing is removed, cover the top and openings of the equipment during the construction period to protect them against dust and debris.

Indoor equipment is not weather resistant. Therefore, it should be stored indoors. Outdoor storage is not recommended. However, if an indoor motor controller must be stored outdoors, it should be securely covered for protection from weather conditions and dirt. Temporary electrical heating should be installed to prevent condensation; approximately 150 watts per section is adequate for the average motor controller’s size and environment. All loose packing or flammable materials should be removed before energizing space heating equipment. If the unit has been provided with optional self-contained space heaters, these may be energized in lieu of installing temporary heating. Any scratches or gouges suffered from shipping or handling should be touched up with spray paint to prevent corrosion.

Storage - outdoor controllers
When it is necessary to store outdoor controllers in a location exposing it to the weather or in a humid location, energize the space heaters provided within the sections and make certain that louvers and vents are uncovered to allow air to circulate. If the equipment cannot be erected at the permanent location immediately, cover shipping splits to protect from the elements.

Regardless of which method of storage is used, energize the space heaters. Refer to wiring diagram drawing for space heater circuit connections. Cover all equipment for protection from the weather. Connect batteries (if provided) to a charger. Lubricate hinges and other moving parts.

Installation

Preparation for installation
Installation shall be in accordance with the National Electrical Code (NFPA 70) and UL standards. Unless the controller has been designed for unusual service conditions, it should not be located where it will be exposed to ambient temperatures above 40 °C (104 °F), corrosive or explosive fumes, dust, vapors, dripping or standing water, abnormal vibration, shock, tilting, or other unusual operating conditions.

Prior to installation of the equipment, study this instruction manual and the supplied drawings, such as general arrangement, three-line diagram, schematic diagrams, wiring diagrams, installation instruction drawing, bill of material, nameplate engraving list and accessories list. A thorough analysis and careful construction may alleviate many problems at the time of installation and during operation.

It is important that a true and level surface be provided that is capable of supporting the weight of the controller and other related equipment. Special attention should be given to the foundation information contained in this instruction manual as well as the information provided on the equipment drawings. Be sure that the foundation conforms to the requirements described in this instruction manual and the general arrangement drawing.

If the controller cannot be lowered over conduits because of headroom or other restrictions, conduit couplings may be grouted in flush with the foundation, and conduit nipples added after the controllers are in place. Conduits should be capped during construction to prevent entry of dirt, moisture and vermin.

All sill channels, bed plates, shims and anchoring hardware are furnished by purchaser unless covered by contract.

If environmental conditions at the installation site require special anchoring provisions (for example, severe seismic requirements), those details will be shown on the drawings of the equipment and are not detailed in this instruction manual.

Clearance required around SIMOVAC (non-arc-resistant) equipment to walls, ceilings and overhead obstructions
Vertical clearance above indoor SIMOVAC controllers must be at least 10″ (254 mm) above the highest portion of the controller. When the controller is energized, maintenance or operating personnel must not be in the areas above the controller or adjacent to the top of the controller, and must not walk on or stand on the top of the controller.

Horizontal clearance from indoor SIMOVAC non-arc-resistant controllers to any wall or any equipment or obstructions behind the controller is not required if the controller is installed without working space behind the equipment that could be occupied by maintenance, operating or other personnel. There must be at least 42″ (1,067 mm) clearance provided in front of the controller for safe handling of the contactors and 4″ (102 mm) to the right of the controller to allow for operation of isolating switch handle.

Note: NFPA 70 (NEC) may require greater clear working space.

Clearance required around SIMOVAC-AR (arc-resistant) equipment to walls, ceilings and overhead obstructions
There must be at least 42″ (1,067 mm) clearance provided in front of the controller for safe handling of the contactors.

Vertical clearance above indoor, arc-resistant SIMOVAC-AR controllers must be at least 10″ (254 mm) above the highest portion of the controller. When the controller is energized, maintenance or operating personnel must not be in the areas above the controller or adjacent to the top of the controller, and must not walk on or stand on the top of the controller.

Horizontal clearance from indoor, arc-resistant SIMOVAC-AR controllers to any wall or any equipment or obstructions behind the controller must be provided as follows:

- If the controller is installed with working space to the rear of the equipment that could be occupied by maintenance, operating or other personnel, there must be at least 37″ (940 mm) clearance provided from the rear most extension of the ventilation openings on the controller.
- If the controller is installed with space behind the equipment and this space is designated and blocked so that maintenance, operating or other personnel are excluded from the space, there must be at least 6″ (152 mm) clearance from the side of the controller to the nearest wall, equipment or other obstruction.
- If the controller is installed in a power equipment center (or powerhouse), or similar outer enclosure, in which access to the rear of the equipment is provided by means of doors or removable panels on the outer enclosure, there must be at least 6″ (152 mm) clearance between the rear most extension of the ventilation openings on the controller and the enclosure or other obstructions.

Horizontal clearance from indoor, arc-resistant controllers to any wall or equipment or other obstruction adjacent to the controller must be provided as follows:

- If the controller is installed with access working space beside the equipment that could be occupied by maintenance, operating or other personnel, there must be at least 24″ (610 mm) clearance provided from the side of the controller to the nearest wall, equipment or other obstruction.
- If the controller is installed with space beside the equipment and this space is designated and blocked so that maintenance, operating or other personnel are excluded from the space, there must be at least 6″ (152 mm) clearance from the side of the controller to the nearest wall, equipment or other obstruction.

Note: NFPA 70 (NEC) may require greater clear working space.

Foundation general requirements
The controller should be installed in a clean, dry, heated place with good ventilation. It should be readily accessible for cleaning and inspection and should be carefully set up and leveled on its supporting foundation and secured in place.

Prior to installation of the controller, careful design, planning and construction of the foundation or base on which the controller will rest must be made. A thorough analysis and careful construction may alleviate many problems at the time of installation and during operation. It is important that a true and level surface be provided that is capable of supporting the weight of the controller and other related equipment.

If the controller cannot be lowered over conduits because of headroom or other restrictions, conduit couplings may be grouted in flush with the foundation, and conduit nipples added after the controller is in place.

Conduits should be capped during construction to prevent entry of dirt, moisture and vermin.

All sill channels, bed plates, shims and anchoring hardware are furnished by purchaser unless covered by contract.

If environmental conditions at the installation site require special anchoring provisions (for example, severe seismic requirements), those details will be shown on the drawings of the equipment and are not detailed in this instruction manual.

Floor plans for several typical SIMOVAC controller configurations are shown in Figure 14: Top view and typical floor plans for SIMOVAC and SIMOVAC-AR controllers beginning on page 31. These are example floor plans only, and the specific drawings for the equipment ordered shall be used for the design of foundations.

Indoor foundations
As it is difficult to obtain a true and level floor on a concrete slab, it is highly recommended that a minimum of 3″ (76 mm) sill channels be grouted into the floor as shown in Figure 12: Anchoring indoor SIMOVAC or SIMOVAC-AR controllers. The surface of the sills should be slightly above floor level.

All primary and secondary cable entrance covers supplied with the controller must be properly reinstalled after drilling to allow for cable entry.

The surfaces of the sills must be level and in the same horizontal plane within 1/16″ (1.6 mm). There should be no projection above this plane within the area covered by the controller. If the floor or sills do not meet this requirement, it will be necessary to use shims when installing the controller on the mounting surface.

Figure 12: Anchoring indoor type SIMOVAC or SIMOVAC-AR controllers illustrates the location for sill channels for anchoring indoor controllers. Sections may be anchored to sills by use of 1/2″ (or 12 mm) diameter anchor bolts or welded in position.

Any conduits that are installed in concrete must be perpendicular to the controller mounting surface. Conduits should extend a minimum of 0.75″ (19 mm) to a maximum of 1.5″ (38 mm) above the mounting surface. This will allow the conduit to enter the section and exclude entry of water and rodents.

Figure 12: Anchoring indoor SIMOVAC or SIMOVAC-AR controllers

Item	Description
A	Anchor bolt locations
B	0.06 (1.52) space between controller and floor

Dimensions in inches (mm)

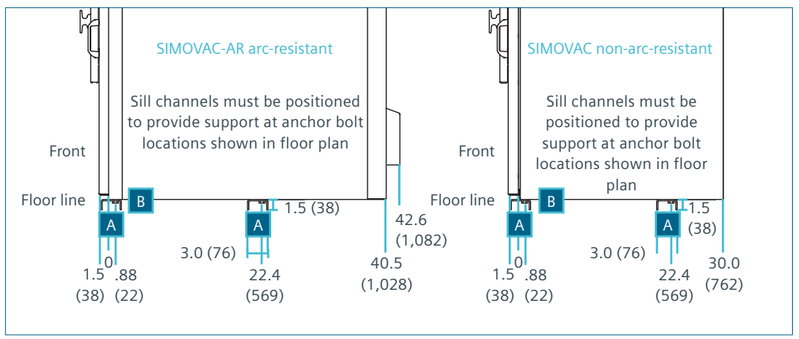

Outdoor foundations
Whichever type of foundation is used (for instance, concrete slab, sill channels, piers or pilings), it must have smooth and level surfaces. Surfaces supporting the controller sections must be in the same horizontal plane within 1/16″ (1.6 mm). If these conditions are not met, it will be necessary to use shims when installing the controller.

For outdoor controllers, support shall be provided at each end and at the side of every second section and at shipping splits, so that the span between supports does not exceed 84″ (2,133 mm).

Refer to Figure 13: Anchoring outdoor type SIMOVAC controller on pages 27-30 and the controller general arrangement drawing for locations of support and anchoring points.

If pilings are used, the diameter is to be determined by purchaser; however, they should not be less than 12″ (305 mm) diameter for sufficient contact, room for anchor bolts and grouting in of bed plates (if used). All shipping splits must be properly supported.

Any conduits that are installed in concrete must be perpendicular to the controller mounting surface. Conduits should extend a minimum of 6.75″ (171 mm) to a maximum of 7.5″ (190 mm) above the mounting surface. This will allow the conduit to enter the section and exclude entry of water and rodents.

Welding the steel base or sill channels to a steel floor plate is an alternate mounting method especially recommended in areas subject to seismic (earthquake) activity.

For SIMOVAC-AR arc-resistant controllers, any gaps around the entire base of the equipment between the controller enclosure and the support foundation must be filled. Due to variable surface conditions at installation sites, this is needed to prevent the escape of arcing by-products in the event of an arcing fault. Asphaltic or epoxy materials should be suitable, especially if the gaps are significant. For small gaps, commonly available RTV silicone caulk is suitable.

The sealing of any gaps is also desirable with SIMOVAC non-arc-resistant controllers to reduce the possibility of vermin entry.

All primary and secondary cable entrance covers supplied with the controller must be properly reinstalled after drilling to allow for cable entry.

Figure 13: Anchoring outdoor type SIMOVAC controller

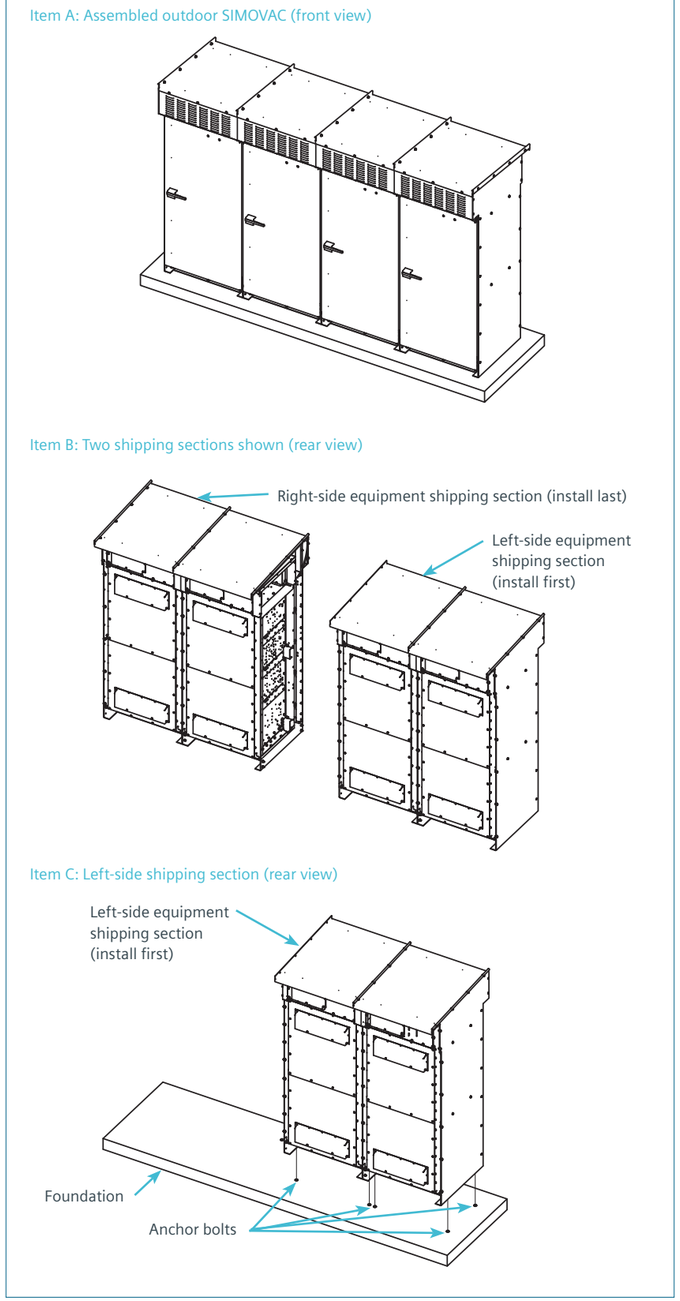

Figure 13: Anchoring outdoor type SIMOVAC controller (continued)

Item D

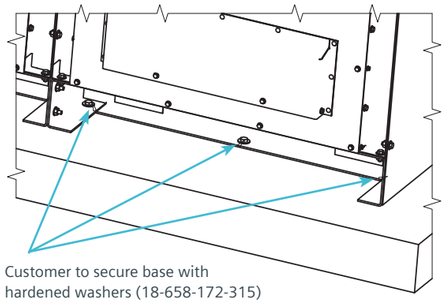

Customer to secure base with hardened washers (18-658-172-315) provided by Siemens. Hardware must meet SAE grade 5 specifications typical four places per controller section (two at rear of equipment, two at front side of equipment). See note.

Note: Seismic anchoring shown. Non-seismic anchoring similar, except for position of anchor bolts and use of clamping bars. See order general arrangement for specific anchoring arrangement.

Item F

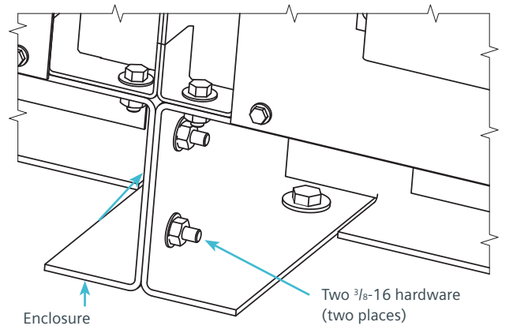

Item E: Right-side shipping section (rear view)

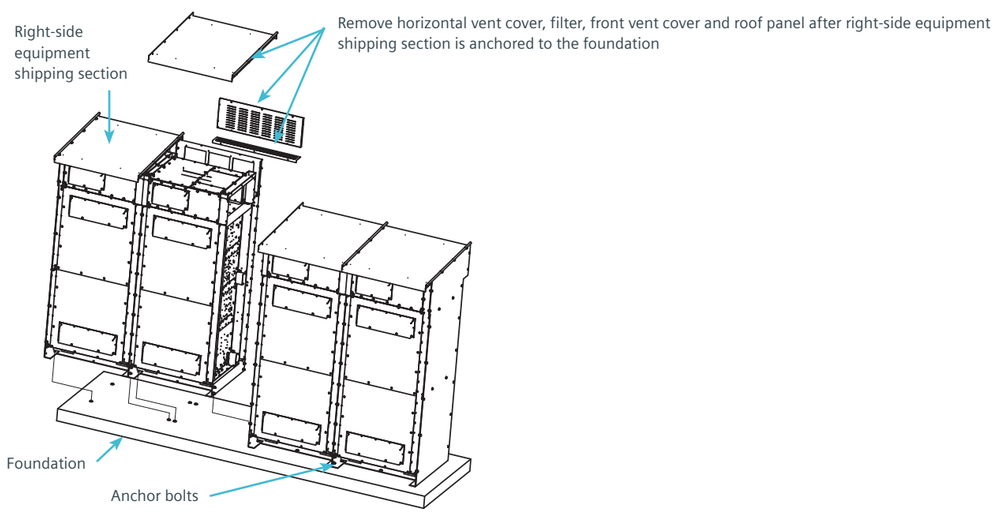

Figure 13: Anchoring outdoor type SIMOVAC controller (continued)

Item G: Rear view

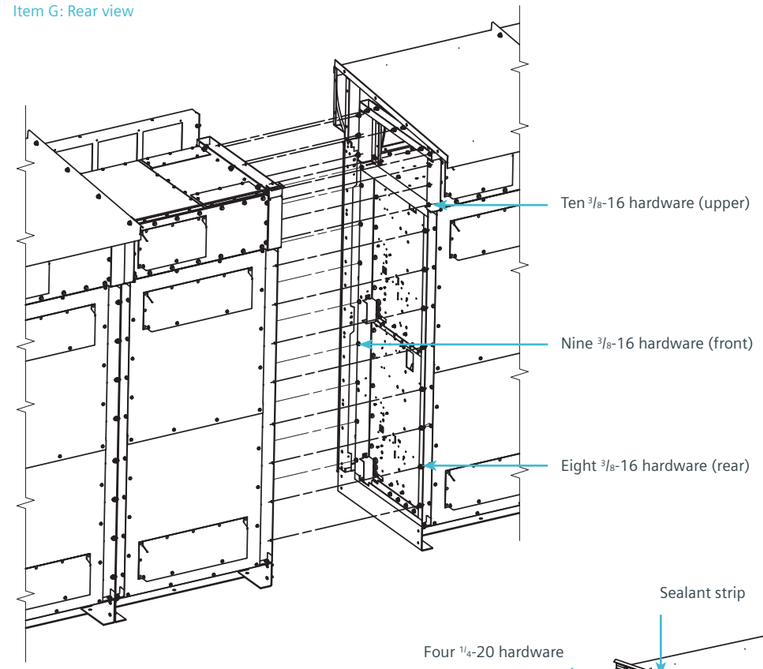

Item H: Front view

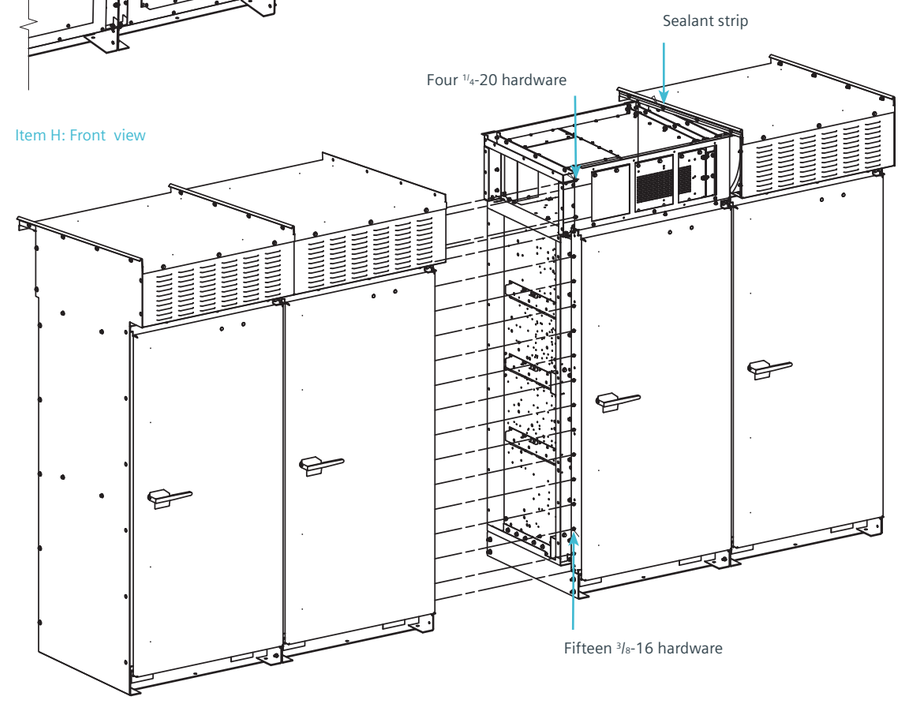

Figure 13: Anchoring outdoor type SIMOVAC controller (continued)

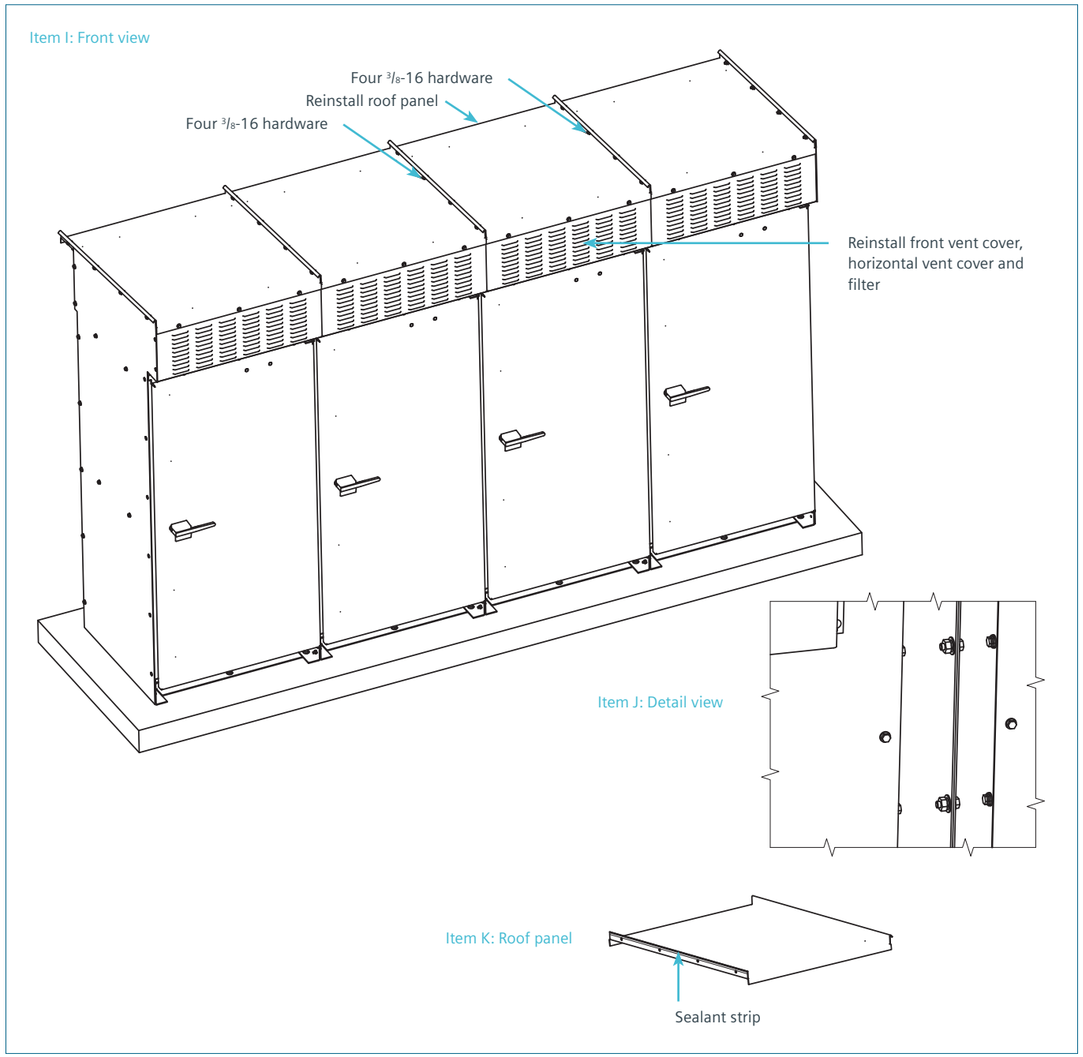

Figure 14: Top view and typical floor plans for SIMOVAC and SIMOVAC-AR controllers

Item	Configuration[1]	Page
C	Two-high indoor arc-resistant controller	31
D	Two-high indoor non-arc-resistant controller	31
M	Solid-state reduced-voltage arc-resistant up to 5 kV	32
N	Solid-state reduced-voltage non-arc-resistant up to 5 kV	32
S	Outdoor 42" (1,067 mm) structure	33

Footnote:

1. For other configurations, please refer to selection and application guide EMMS-T40002-XX-XXXX.

Figure 14: Top view and typical floor plans for SIMOVAC and SIMOVAC-AR controllers (continued)

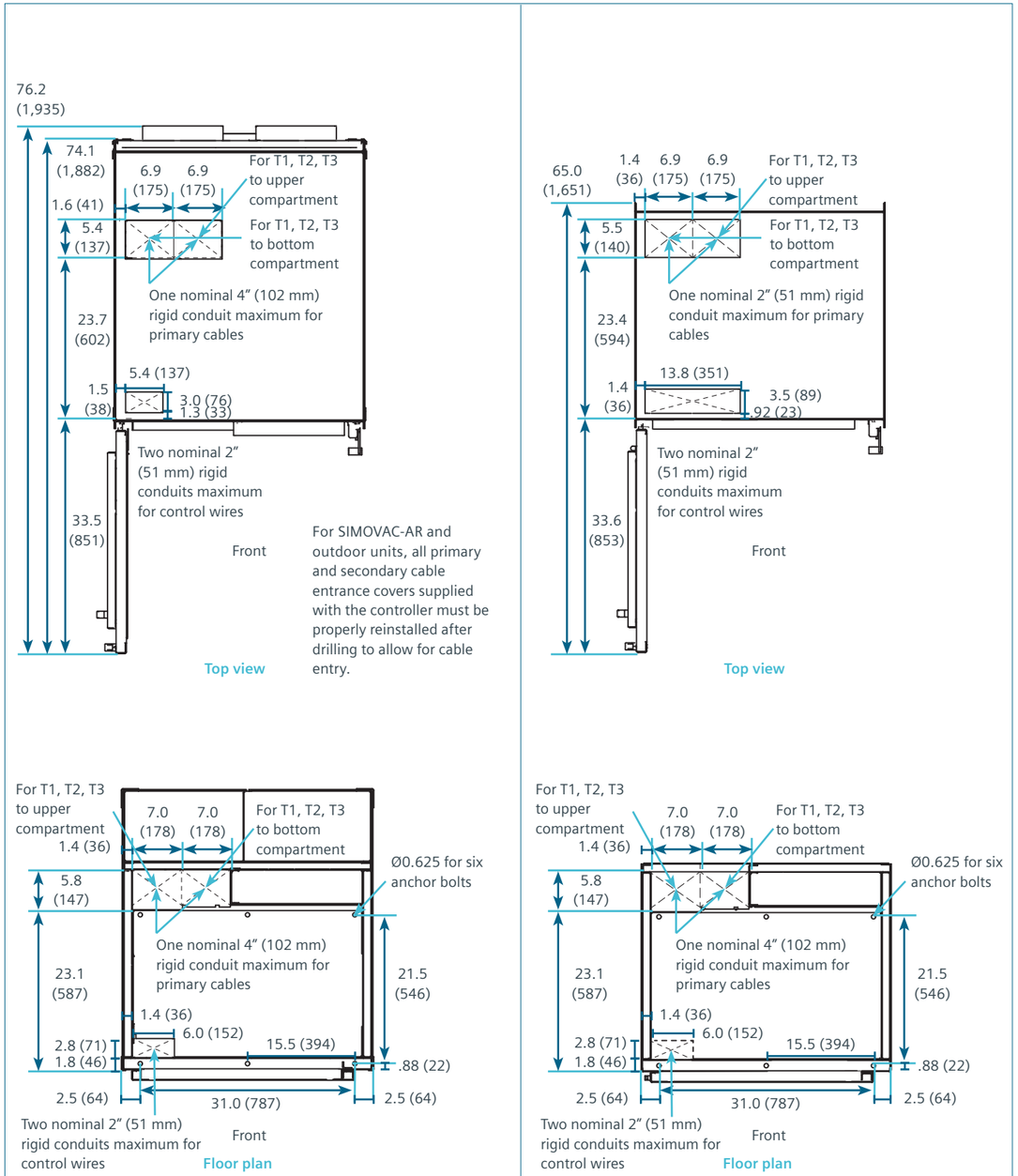

Figure 14: Top view and typical floor plans for SIMOVAC and SIMOVAC-AR controllers (continued)

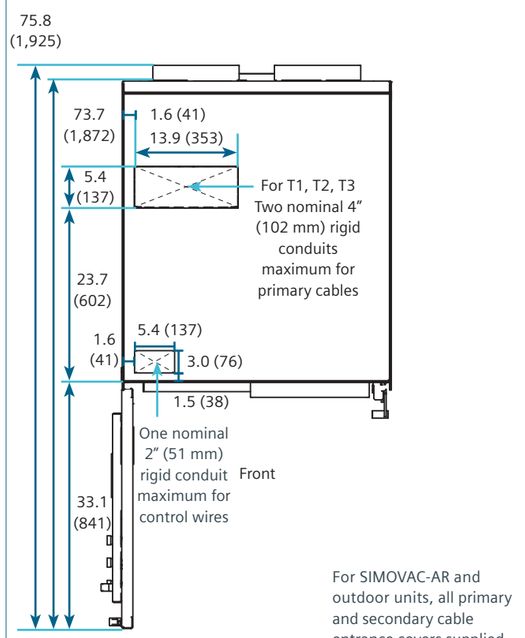

For SIMOVAC-AR and outdoor units, all primary and secondary cable entrance covers supplied with the controller must be properly reinstalled after drilling to allow for cable entry.

Top view

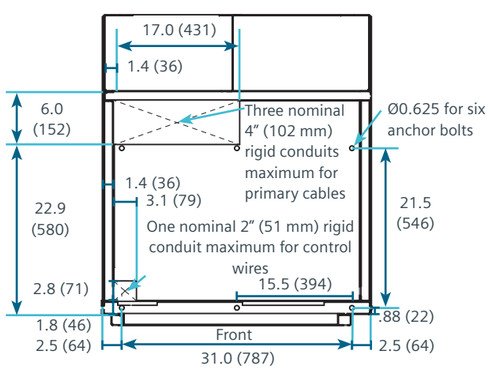

Floor plan

Configuration M: Solid-state reduced-voltage arc-resistant up to 5 kV

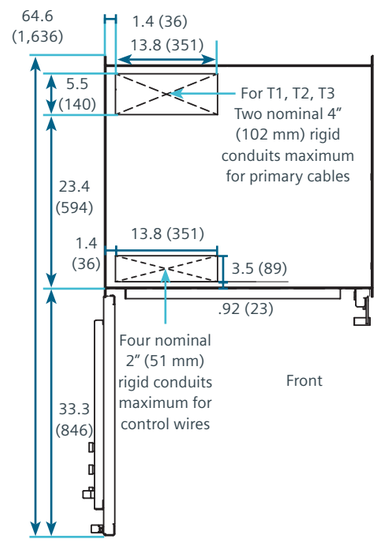

Top view

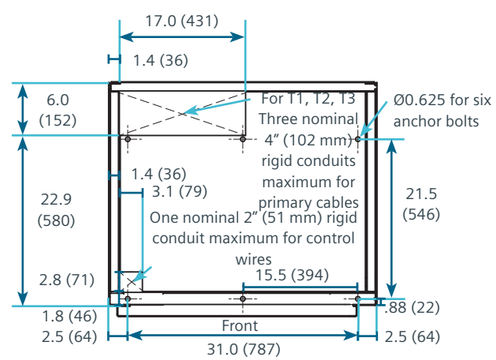

Floor plan

Configuration N: Solid-state reduced-voltage non-arc-resistant up to 5 kV

Figure 14: Top view and typical floor plans for SIMOVAC and SIMOVAC-AR controllers (continued)

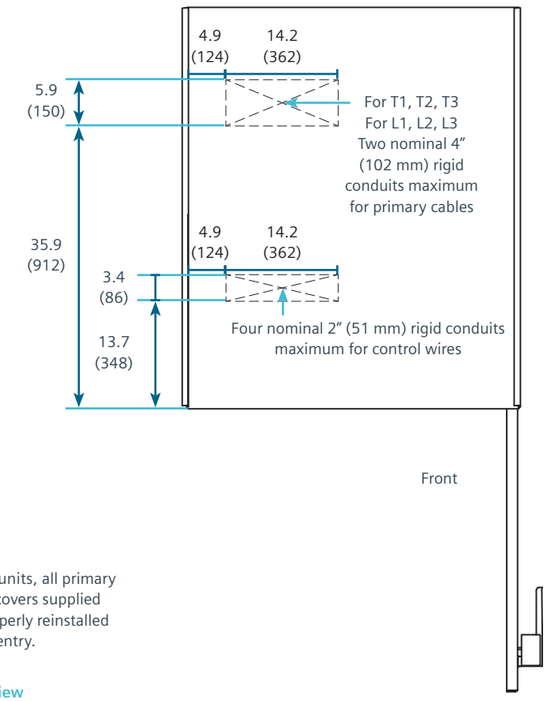

For SIMOVAC-AR and outdoor units, all primary and secondary cable entrance covers supplied with the controller must be properly reinstalled after drilling to allow for cable entry.

Top view

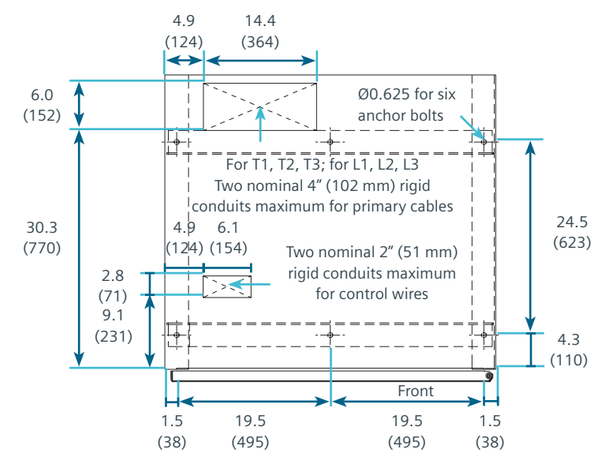

Floor plan

Configuration S: Outdoor 42" (1,067) structure

Installing shipping sections
The proper method of installation depends on whether the equipment has been shipped as one complete group or in two or more shipping sections. The general arrangement drawings will indicate the shipping sections, section numbers and their location within the equipment lineup. Sections are assembled and wired in accordance with the arrangement as in the final installation.

Before setting and erecting the cubicles, determine the correct location of each shipping group on the general arrangement drawing. Sweep the mounting surface to remove all dirt and debris.

Anchoring, levelling and assembling indoor controllers
Indoor controller shipping groups are held in true alignment by bolts holding the vertical sections to each other. Figures 15 and 16 show the location of the inter-unit fasteners used to attach sections together.

The entire shipping group is to be anchored and leveled as a single element without loosening any hardware until the entire shipping group is leveled and anchored.

1. The controller equipment was accurately aligned at the factory. This alignment ensures proper operation and fit of mating parts. Supporting surfaces for the controller at each anchoring bolt location must be level and in the same plane within 1/16" (1.6 mm). There must not be any projection above this plane within the area covered by the controller sections.

   If the floor or grouted sill channels do not meet this requirement, it will be necessary to shim in the following manner. The four anchor bolt locations (refer to Figure 12 on page 26) in each section must freely rest in firm contact with the mounting support surfaces.

   Do not force sections into firm contact by drawing down anchoring bolts because such drastic means may distort the sections. Add 4" (102 mm) square shims adjacent to anchor bolts until firm contact is achieved. Check each anchor bolt location, four or six per section.

   For seismic applications, six anchor bolt locations are provided and details can be found on the general arrangement drawings.

Figure 15: Location of fasteners for connecting shipping groups of SIMOVAC controllers

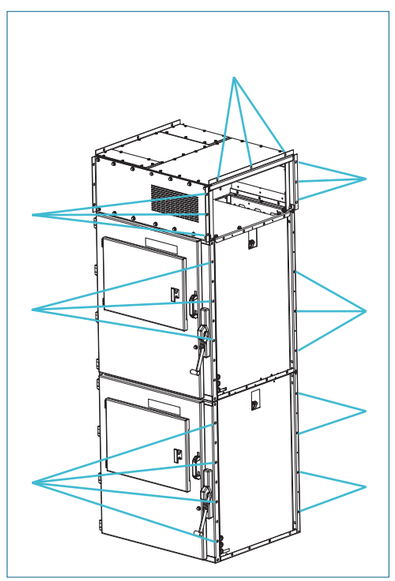

Figure 16: Location of fasteners for connecting shipping groups of SIMOVAC-AR controllers

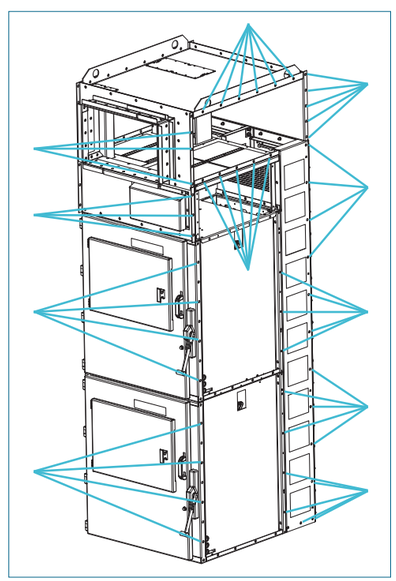

2. Tighten anchor bolts or weld the controller to sills.
3. If the lineup consists of multiple groups, move the next group into position with the front of sections in line and tight against the adjacent group using the methods described earlier. Do not bolt groups together at this time. Check that the sections are in firm contact with the foundation at each corner and anchor point and that bolt holes are in alignment. Add 4" (102 mm) square shims as necessary. Tighten the anchor bolts or weld the sections to the mounting surfaces. Then, bolt the groups together at the locations shown in Figure 15 or 16 on page 46.
4. For SIMOVAC-AR arc-resistant controllers, after all groups have been bolted together and permanently welded or bolted in place, seal any gaps around the entire base of the equipment between the controller enclosure and the support foundation by applying asphaltic or epoxy grout, if the gaps are significant. For small gaps, commonly available RTV silicone caulk is suitable.

   The sealing of any gaps is also desirable with SIMOVAC non-arc-resistant controllers to reduce the possibility of vermin entry.
5. For SIMOVAC-AR arc-resistant controllers, after installation of all shipping splits is complete, lifting plates that may have been removed during installation need to be reinstalled and the hardware reassembled. Torque the 3/8-16 SAE grade 5 hardware to 25-40 lbf · ft (34-54 N·m).

Important: The lift plates must remain installed to maintain the integrity of the equipment during an internal arcing event.

Assembling and installing the exhaust plenum for SIMOVAC-AR controllers
Depending on the site requirements and the number of sections, several exhaust plenums may have to be installed to exhaust arcing gases out of the equipment room. Consult the General arrangement drawing to determine quantity and location of plenums required. The exhaust plenum is modular in construction with sections up to 36" (914 mm) long weighing up to 160 lbs (72.5 kg) each. Each section has provisions for lifting with a crane and the required assembly hardware required is pre-installed. Each section is shipped in a separate package.

Temporary supports are required during the installation process and they should not be removed until the entire exhaust plenum is assembled and the final supports are installed.

Important: Exhaust plenum must be routed outside the equipment room and to an area where personnel will not be present when the equipment is energized.

⚠ WARNING

Heavy weight.

Can result in death, serious injury or property damage.

Observe all handling instructions in this instruction manual to prevent tipping or dropping of equipment.

The temporary supports used during the plenum installation process should not be removed until the entire exhaust plenum is assembled and the final supports are installed.

Item	Description
A	Pressure relief channel (PRC)
B	PRC interface flange
C	24 3/8-16 hardware (refer to step 1)
D	Exhaust plenum section

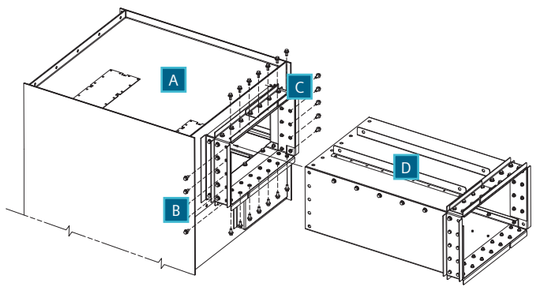

Figure 17: Connection of the exhaust plenum to PRC

Item	Description
A	Exhaust plenum section
B	24 3/8-16 hardware (refer to step 1)
C	Support locations (four per exhaust plenum section)

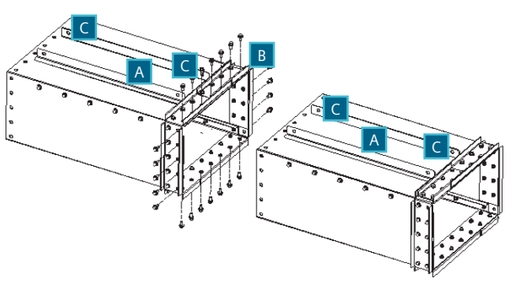

Figure 18: Exhaust plenum installation

Connecting the exhaust plenum to SIMOVAC-AR controllers

1. Remove the row of 3/8-16 hardware furthest from the pressure relief channel (PRC) on the interface flange.
2. Loosen the row of hardware closest to the PRC on the interface flange but do not remove the hardware.
3. Insert the plenum section into the PRC interface flange making sure the inner plates of the interface flange are inside the plenum section and the other end of the plenum section is adequately supported.
4. Reinstall the row of hardware removed in step 1 passing it through the plenum section and torque both rows of hardware to 25-40 lbf · ft (34-54 N·m).

Joining exhaust plenum sections for SIMOVAC-AR controllers

1. Remove the outer row of 3/8-16 hardware from the interface flange of the first plenum section that has been attached to the PRC.
2. Loosen the inner row of hardware on the interface flange of the first plenum section but do not remove the hardware.
3. Insert the second plenum section into the interface flange of the first plenum section making sure the inner plates of the interface flange are inside the second plenum section and the other end of the next plenum section is adequately supported.
4. Reinstall the row of hardware removed in step 1 passing it through the second plenum section and torque both rows of hardware to 25-40 lbf · ft (34-54 N·m).
5. Repeat steps 1 through 4 making sure to adequately support the entire length of the plenum (at two-section intervals maximum and at the end of the plenum furthest from the PRC) during the process.

Note: The last plenum section before the exhaust exit section passes through the wall must have a minimum clearance of 0.38" (10 mm) to the inner surface of the wall. Refer to Figure 19 on page 37.

Figure 19: Installation of exhaust plenum exit

Item	Description
A	Exhaust plenum section
B	24 3/8-16 hardware
C	Exhaust exit section
D	Exhaust flap
E	Screw may be removed if inside a wall
F	Exhaust flap open
G	Wall
H	Field caulk all around
I	Fenced (or otherwise protected) area with restricted access
J	Exterior (building)
K	Exhaust plenum exit

The detail below shows the minimum recommended clearance from the exhaust plenum exit. When the equipment is operating, this area should be kept clear of personnel and/or combustible or flammable materials.

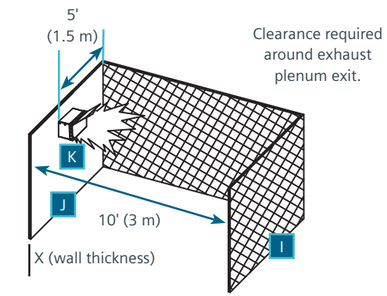

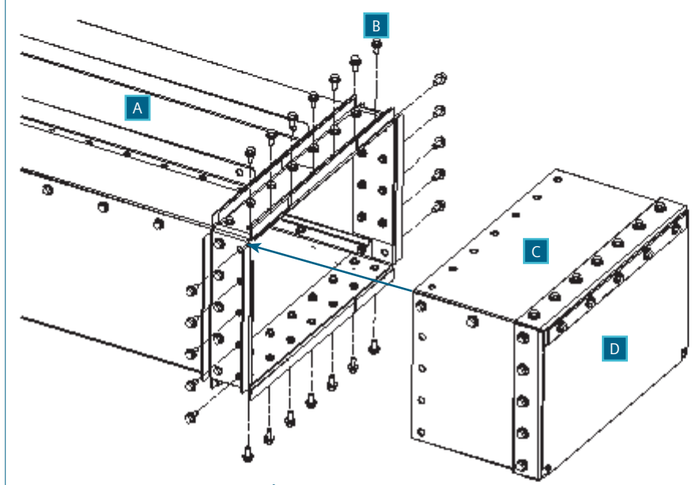

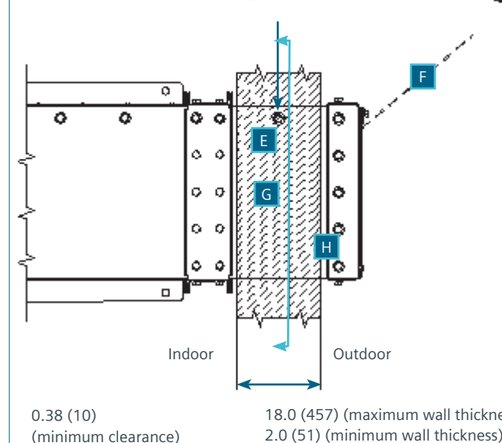

Dimensions in inches (mm)

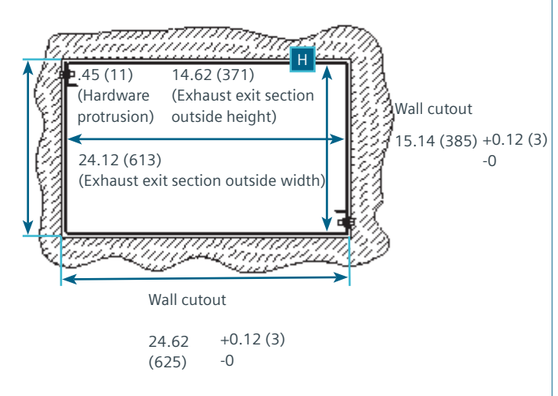

Installing exhaust plenum exit for SIMOVAC-AR controllers

1. Remove the outer row of 3/8-16 hardware from the interface flange of the final plenum section of the run.
2. Loosen the inner row of hardware on the interface flange of the final plenum section of the run but do not remove the hardware.
3. From outside of the building exterior wall, pass the plenum exit section through the wall and insert it into the interface flange of the final plenum section of the run making sure the inner plates of the interface flange are inside the plenum exit section and the hinge side of the exhaust flap is on top.
4. Reinstall the row of hardware removed in step 1 passing it through the plenum exit section and torque both rows of hardware to 25-40 lbf · ft (34-54 N·m).
5. Ensure that there are no obstructions around the exhaust flap of the plenum exit that would prevent proper operation of the flap.
6. Apply weather sealant (caulk) around the perimeter of the plenum exit section as shown in Figure 19 on page 37 to provide a weather tight seal.

Important: Exhaust plenum must be routed outside the equipment room and to an area where personnel will not be present when the equipment is energized.

Supporting the exhaust plenum run for SIMOVAC-AR controllers

The exhaust plenum run is not self-supporting and must have no more than one unsupported joint between supports. There should only be one plenum joint between a support and the PRC interface and there should only be one plenum joint between a support and the location where the plenum passes through an exterior building wall as shown in Figure 19 on page 37.

The plenum supports are not supplied by Siemens and must be supplied by the purchaser or the installing contractor.

Supports for the plenum may be either from the floor or from above. Each plenum section is furnished with angles that have 5/8" (16 mm) diameter holes in four locations on the top (as shown in Figure 18 on page 36) that can be used for suspending the plenum section from the ceiling. The types of supports that are commonly used for metal-enclosed bus ducts or cable trays (with adequate capacity to support the weight of the plenum sections) can be used.

Important: For installations where conditions exist that could promote condensation formation inside the plenum, slightly slope the plenum away from the equipment during installation.

Anchoring, leveling and assembling outdoor non-walkin SIMOVAC controllers

In outdoor non-walkin controller arrangements, the SIMOVAC controller (as shipped) is true and in correct position relative to its support base. The formed floor base sections are a permanent part of the SIMOVAC controller, and are not to be loosened or moved from position.

Verify the anchor bolt locations in the concrete and all points shown in the general arrangement plan view. Sweep the foundation to make certain it is free of pebbles and other debris. Check the general arrangement drawing for positioning of the SIMOVAC outdoor non-walk-in controller and sequence of installation if arrangement consists of more than one shipping group.

Determine the correct location of each shipping group as shown on the general arrangement drawing. Ordinarily, the controller section on the left-hand end of the lineup should be installed first, followed by the other controller shipping groups proceeding to the right end of the complete lineup. Make connections between shipping groups before placing subsequent shipping groups in place.

Installation procedure:

1. Prepare foundation: remove nuts from all anchor bolts, remove caps from all secondary and primary conduit stubs and clean away any debris. Prepare controllers: remove covers from secondary conduit openings and from primary conduit openings. Retain covers for later use.

   The arrangement may consist of a single complete shipping group, or may be split into a number of shipping groups for a long lineup. Refer to item C of Figure 13: Anchoring outdoor type SIMOVAC controllers on page 27. Move the first shipping group into position as shown in Figure C.
2. The SIMOVAC controller equipment was accurately aligned at the factory. This care ensures proper operation and fit of mating parts. Supporting surfaces for the SIMOVAC controller's 6" (152 mm) base must be level and in the same plane within 0.06" (1.6 mm).

   If concrete, grouted channels, pier supports, etc. do not meet this requirement, or if there is any projection higher than the support points in line with the base, shims must be installed in the following manner to provide an equivalent true surface for SIMOVAC controller support.

   Outdoor SIMOVAC controller groups which have been assembled on a 6" (152 mm) base must be supported along this base with a span between support points not exceeding 84" (2,133 mm). Support must be provided at each end, at the side of every second section, and at shipping splits. For equipment required to withstand seismic disturbances, refer to the order general arrangement drawings for additional support locations. If shims are required, use 4" (102 mm) square strips placed between the bottom of the base and the foundation, in the anchor bolt area where they will be clamped firmly in place. Do not force the cubicle into firm contact by drawing down anchoring bolts as such drastic means will distort cubicles.
3. Anchor and level this group, shimming as needed to obtain proper support of the equipment. Anchoring (and shimming) locations are shown in item D in Figure 13: Anchoring outdoor type SIMOVAC controllers on page 28.
4. Add clamp washers and nuts to anchor bolts and tighten securely. For equipment required to withstand seismic disturbances, clamp washers are not used. Instead, install anchoring hardware through the holes in the base channel as shown in item D of Figure 13: Anchoring outdoor type SIMOVAC controllers on page 28.
5. Temporarily remove the horizontal vent cover, the filter, the front vent cover and the roof panel of the second shipping group (refer to item E of Figure 13: Anchoring outdoor type SIMOVAC controllers on page 28). These panels will be replaced when the second shipping group has been connected.

6. Move the next SIMOVAC controller shipping group into place. The front edge of the cubicle base should be in line with the base of the previously installed group. Make certain that the end of the group being installed is tightly against the previously installed group.

   Check that the sections are in firm contact with the supports and anchor points and that bolt holes for interconnections (refer to Figure 15: Location of fasteners for connecting shipping groups of SIMOVAC controllers on page 34) are in alignment. Repeat steps 3 and 4 to anchor and level the next shipping group.

7. Install interconnections hardware (refer to Figure 15: Location of fasteners for connecting shipping groups of SIMOVAC controllers on page 34 and items F and G of Figure 13: Anchoring outdoor type SIMOVAC controllers on pages 28-29. Access to the hardware for the bus bar compartment is through the opening available with the removal of the roof panel in step 6.

8. After all interconnecting hardware is installed; replace the parts removed in step 5.

9. Join the roof panels (refer to item I of Figure 13: Anchoring outdoor type SIMOVAC controllers on page 30. Verify that the sealant strips are in place prior to joining the roof panels (refer to item H of Figure 13: Anchoring outdoor type SIMOVAC controllers on page 29. Torque the 3/8"-16 hardware to 25-40 lbf · ft (34-54 N·m).

10. Caulk all joints with the metal filler provided.

11. If additional shipping groups are required to install the complete lineup of SIMOVAC controller structures, repeat the steps in steps 5-10 until all groups have been installed.

Expanding length of existing SIMOVAC (non-arc-resistant) controllers by addition of units

The factory assembled controller can be expanded on either side of the current controller arrangement, depending on order requirements. Refer to the general arrangement drawing for specific information.

Follow all guidelines as stated in the installation section of the controller instruction manual when positioning shipping units.

Follow all guidelines as stated in the installation section of the controller instruction manual when anchoring, leveling and installing each shipping section.

Certain items will be removed from the existing installation as described in the following instructions. Remove these items carefully and store them for remounting in the expanded setup.

1. Remove the top covers, bus barrier and end trim from the end of the existing lineup. Refer to item A of Figure 20: SIMOVAC lineup extension instructions on page 41.

2. The bus bars located at the end of the lineups and in the middle of lineups are specifically designed for those locations. When extending a lineup, the bus bars will need to be updated accordingly. If the lineup is only being extended by one section, then replace the bus bars in the existing section with those shipped with the extension section using the following procedure. If more than one section is being added to the lineup, the existing bus bars in the end section will be removed and scrapped.

   A. Optional molded plastic insulation boots for bus bar joints may be present. Note their location and orientation so they may be properly reinstalled after the bus bars are replaced and the joint is bolted together. Carefully remove and save the nylon hardware and the boot.

   B. Remove the top bus bar supports and save for reassembly in a later step (refer to item B of Figure 20: SIMOVAC lineup extension instructions on page 41).

Item A: Part removal

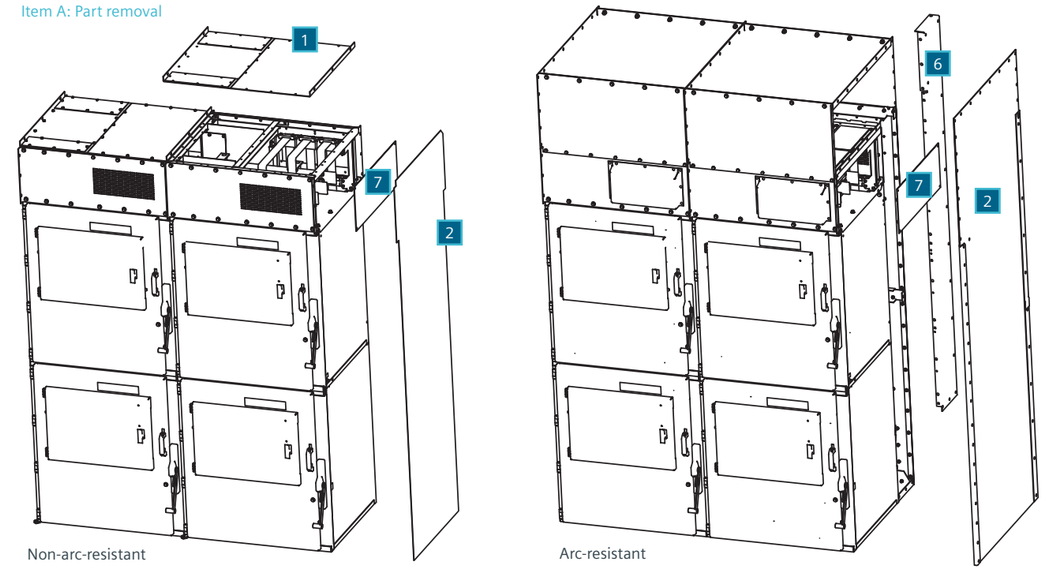

Item B: Detail of bus bar compartment

Item	Description	Item	Description
1	Top covers	5	Section risers
2	End trim	6	Closed end cover
3	Bus joint	7	Bus barrier
4	Top bus bar support and brace (for 63 kA only)		

Figure 20: SIMOVAC lineup extension instructions

C. Remove the 1/2-13 hardware from the bus joints and section risers and save.

D. Observe the relationship of the bus bar to the section risers (for example, whether bus bar is in front of or behind the riser). Maintain this relationship when installing bus bars. Also observe if spacers are present.

E. Remove the bus bar(s) from the existing section.

F. Install mid-section bus bar(s) in the existing section. Each of the bus bars should measure 35.75" (908 mm) for 36" (914 mm) wide structures or 41.75" (1,064 mm) for 42" (1,067 mm) wide structures, or 47.75" (1,213 mm) for 48" (1,219 mm) wide structures. Maintain the relationships observed in step 3.D and install spacers as required.

G. All surfaces must be free of dust, dirt or other foreign material. Do not use any abrasive cleaner on plated contact surfaces. Cleaning is normally not necessary and should not be done unless parts are badly tarnished. If cleaning is necessary, use a mild, nonabrasive cleaner and thoroughly rinse the parts to remove any residue and keep the cleaning agent off insulation.

H. Before assembling any bus bar joint, check that the bar is seated properly in the bus supports (when required), including neoprene grommets where that option is furnished. Observe the factory positioning of these grommets when connecting at shipping splits to ensure that bus bars will lineup properly.

3. Assemble all joints with the parts dry. Do not use any grease or "no-oxide" product.

4. Use proper hardware, as shown in Figure 25: Main bus joining connection configurations on page 46. Heavy flat washers are used on both sides of the bus bar joint, under the cap screw head as well as under the nut and lock washer. These washers ensure an evenly distributed force around each bolt, producing a low-resistance joint. Proper torque value produces a joint of adequate pressure without cold flow.

Note: Do not substitute with smaller or lower grade hardware than supplied.

5. Assemble all joints as shown in Figure 24: Typical main bus joint connection configurations on page 46. Install all hardware the same way that factory bus connections were installed. Hardware must be aligned properly or molded insulation boots (if provided) may not fit over the joints.

   A. Place a flat washer on the cap screw (bolt) and insert the cap screw through the bus joint.

   B. Place a flat washer against the bus bar with a lock washer between the flat washer and the nut.

   C. Spacers are required at certain bus joints to insure the cross sectional area of the joint. The conditions where these spacers are required vary with the type of bus joint.

6. Torque the 1/2-13 SAE grade 5 cap screws to 50-75 lbf · ft (68-102 N·m). (If special hardware is required by an order, other torque values will be supplied with field assembly drawings).

7. Assemble the top bus supports removed in step 3.B. Torque the 3/8-16 hardware to 11-13 lbf · ft (15-18 N·m.)

8. Install optional bus joint insulation boots as described on page 48.

9. If a single section is being added to the lineup, remove the top covers and follow steps 2-8, with the exception of installing end unit bus bars in place of mid-section bus bars in step 2.F.

10. After bus bars have been installed, follow the instructions for Anchoring, leveling and assembling indoor controller on page 46.

11. Follow the instructions on pages 46-49 to assemble the bus joints.

12. Reassemble top covers removed in step 1.

13. Reassemble end trim and bus barrier removed in step 1 to the last section installed in the extension.

Expanding length of existing SIMOVAC-AR (arc-resistant) controllers by addition of units

The factory assembled controller can be expanded on either side of the current controller arrangement, depending on order requirements. Refer to the general arrangement drawing for specific information.

Follow all guidelines as stated in the installation section of the controller instruction manual when positioning shipping groups.

Follow all guidelines as stated in the installation section of the controller instruction manual when anchoring, leveling and installing each shipping group.

Certain items will be removed from the existing installation as described in the following instructions. Remove these items carefully and store them for remounting in the expanded setup.

1. Remove the corner braces, end trim, bus barrier and closed-end cover from the end of the existing lineup. Refer to item A of Figure 20: SIMOVAC lineup extension instructions on page 41.

2. Remove the main bus bar compartment access panel on the front the section as described in Figure 22: Connection of main bus at shipping split on page 45. This will provide access to change the bus bar(s).

3. Follow steps 2-8 in Expanding length of existing SIMOVAC (non-arc-resistant) controller by addition of units on pages 40-42.

4. If a single section is being added to the lineup, remove main bus bar compartment access panel on the front the section and follow steps 2-8, with the exception of installing end unit bus bars in place of mid-section bus bars in step 2.F.

5. After bus bars have been installed, follow the instructions for Anchoring, leveling and assembling indoor controller on page 26.

6. Follow the instructions on pages 46-49 to assemble the bus joints.

7. Disassemble open-end cover from new end unit and install in existing unit.

8. Reassemble closed end cover, bus barrier, end trim and corner braces removed in step 1 to the last section installed in the extension.

Expanding length of existing SIMOVAC outdoor controllers by addition of units

The factory assembled controllers can be expanded on either side of the current controller arrangement, depending on order requirements. Refer to the general arrangement drawing for specific information.

Follow all guidelines as stated in the installation section of the controller instruction manual when positioning shipping units.

Follow all guidelines as stated in the installation section of the controller instruction manual when anchoring, leveling and installing each shipping section.

Certain items will be removed from the existing installation as described in the following instructions. Remove these items carefully and store them for remounting in the expanded setup.

1. Remove the horizontal vent cover, the filter, the front vent cover and the roof panel as described in step 5 of Anchoring, leveling and assembling outdoor non-walkin SIMOVAC controllers on page 51.

2. Follow steps 1-9 from Expanding length of existing SIMOVAC (non-arc-resistant) controller by addition of units on pages 40-42.

3. After bus bars have been installed, follow the instructions for Anchoring, leveling and assembling outdoor non-walkin SIMOVAC controllers on page 51.

4. Follow the instructions on pages 46-49 to assemble the bus joints.

5. Reassemble the top covers, the roof panel, the front vent cover, the filter and the horizontal vent cover removed in prior steps.

6. Reassembly end trim removed in step 1 to the last section installed in the extension.

Bus bar
Bus bar is furnished for connection between many of the high-voltage items within the controller, such as: main bus, isolating switches, cable termination pads. For certain connections inside the cells (for example, voltage transformers, control power transformers, surge limiters or controller load connections) cables are provided.

Standard bus bar material is copper with silver-plated joints for electrical connections. Copper bus, with tin-plated joint surfaces, is also available as an option. Bus bars are insulated with an epoxy insulation applied by a fluidized bed method. Bus bar joints may be insulated with optional molded-insulation boots or tape.

Additional insulation is provided by clearance through air and bus supports. In some locations, standoff insulators or glass-polyester moldings are provided as standard. Bus is insulated as part of a coordinated insulation system. Air or creep distance plus bus insulation combines to provide the needed insulation level. Connections may be optionally insulated with boot or tape.

Note: Bus insulation is not designed to prevent shock.

DANGER

Hazardous voltages.

Will cause death, serious injury or property damage.

Do not contact energized conductors.

De-energize and ground high-voltage conductors before working on or near them.

Figure 21: Main bus with optional insulating boots

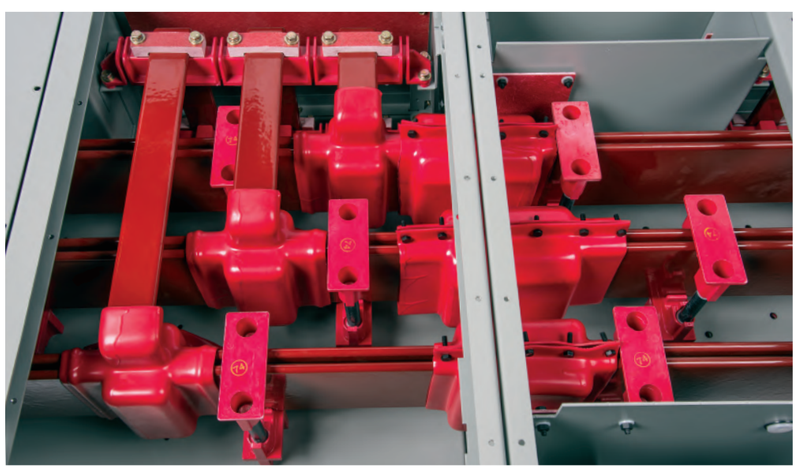

Figure 22: Connection of main bus at shipping split

1. Remove cover to gain access to main bus connections

2. Remove cover to gain access to main bus connections

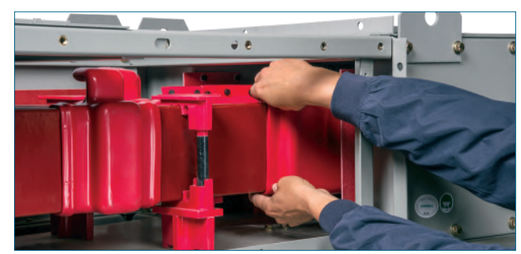

3. Remove insulating boot (if furnished).

4. Install splice plates to connect main bus. Torque hardware.

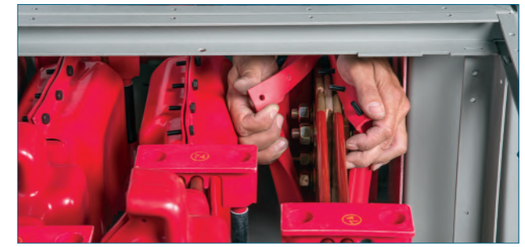

5. Reinstall insulating boot (if furnished). Alternate means of access for non-arc-resistant equipment through section top plate.

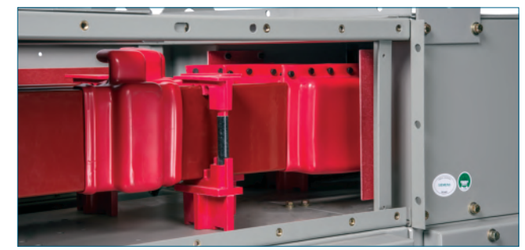

6. Reinstall insulating boot (if furnished). Alternate means of access for non-arc-resistant equipment through section top plate.

7. Attach cover.

Figure 23: Ground bus connection at shipping split

Left unit

Right unit

Figure 24: Main bus joint connection configurations

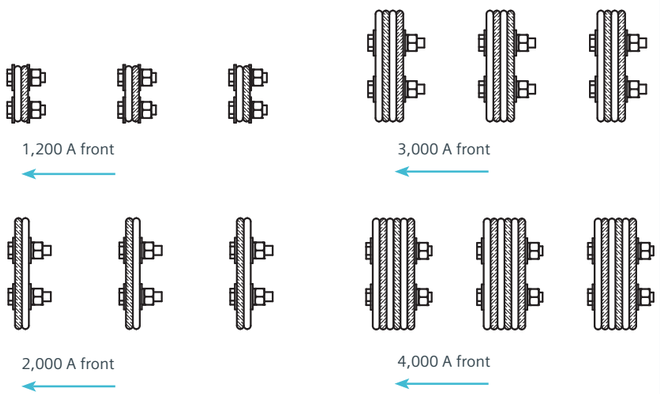

Figure 25: Main bus joining connection configurations

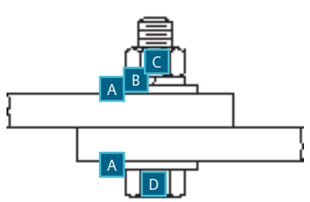

Item	Description
A	Flat washer
B	Lock washer
C	Nut
D	Cap screw

Silver-plated copper to silver-plated copper bus bars

Bus joints – main bus and ground bus
When a controller lineup is split for shipping purposes, the horizontal bus (main bus) and ground bus connections must be made when installing the equipment. These bolted connections are relatively simple to make. Refer to Figure 24: Main bus joint connection configurations for the possible main bus joint connection configurations; Figure 22: Connection of main bus at shipping split on page 45 which illustrates how to access the main bus area; Figure 25 shows a typical bus joint; and Figure 23 showing the ground bus connection details.

The bus bars and connection hardware for joining the bus together are normally shipped mounted on a bracket in one of the sections involved in the connection. When this is not possible, these items will be shipped in a separate package.

Full access to the main bus area is achieved by removing the main bus compartment access panel on the front of the section. The panel is fastened with $^{3}/_{8}$-16 hardware with captive nuts. The sequence for removal is illustrated in Figure 22: Connection of main bus at shipping split on page 45. After completion of the bus assembly, this panel should be reassembled in reverse sequence.

1. Optional molded plastic insulation boots for bus bar joints are normally shipped factory installed at the shipping splits. Note their location and orientation so they may be properly reinstalled after the joint is bolted together. Carefully remove and save the nylon hardware and the boot.
2. All surfaces must be free of dust, dirt or other foreign material. Do not use any abrasive cleaner on plated contact surfaces. Cleaning is normally not necessary and should not be done unless parts are badly tarnished. If cleaning is necessary, use a mild, nonabrasive cleaner and thoroughly rinse the parts to remove any residue and keep the cleaning agent off insulation.
3. Before assembling any bus bar joint, check that the bar is seated properly in the bus supports (when required), including neoprene grommets where that option is furnished. Observe the factory positioning of these grommets when connecting at shipping splits to ensure that bus bars will lineup properly.
4. Also observe the relationship of the bus bar to the section risers (for example, whether bus bar is in front of or behind the riser). Maintain this relationship when connecting bus bars. Spacers are required in some bus joint connections.
5. Assemble all joints with the parts dry. Do not use any grease or “no-oxide” product.
6. Use proper hardware, as shown in Figure 24 on page 46. Heavy flat washers are used on both sides of the bus bar joint, under the cap screw head as well as under the nut and lock washer. These washers ensure an evenly distributed force around each bolt, producing a low-resistance joint. Proper torque value produces a joint of adequate pressure without cold flow.

Note: Do not substitute with smaller or lower grade hardware than supplied.

7. Assemble all joints as shown in Figure 24: Main bus joint connection configurations on page 46. Install all hardware the same way that factory bus connections were installed. Hardware must be aligned properly or molded insulation boots (if provided) may not fit over the joints.
   A. Place a flat washer on the cap screw (bolt) and insert the cap screw through the bus joint.
   B. Place a flat washer against the bus bar with a lock washer between the flat washer and the nut.
   C. Spacers are required at certain bus joints to insure the cross sectional area of the joint. The conditions where these spacers are required vary with the type of bus joint.
8. Torque the $^{1}/_{2}$-13 SAE Grade 5 cap screws to 50-75 lbf · ft (68-102 N·m). (If special hardware is required by an order, other torque values will be supplied with field assembly drawings.)
9. Install optional bus joint insulation boots or tape joints where required per the instructions in the following sections.
10. Re-install the main bus compartment access panel on the front of the section. Torque the $^{3}/_{8}$-16 SAE Grade 5 cap screws used to fasten the panel to 25-40 lbf · ft (34-54 N·m).

Full access to the ground bus is achieved by opening the lower front door of the controller on the front of the section as illustrated in Figure 23: Ground bus connection at shipping split on page 46.

1. To connect the ground bus, insert the splice bar through the side wall opening to overlap the ground bus in the adjacent section.
2. Torque the $^{3}/_{8}$-16 SAE Grade 5 cap screws used to fasten the panel to 25-40 lbf · ft (34-54 N·m).

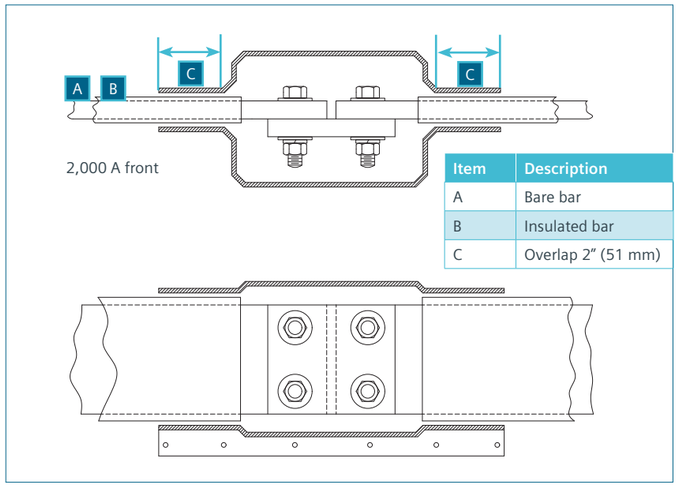

Item	Description
A	Bare bar
B	Insulated bar
C	Overlap 2" (51 mm)

Figure 26: Typical installation of insulating boots

Bus joint insulation boots (optional)
SIMOVAC bus bar joints may be insulated with optional molded insulation boots installed at the factory (refer to Figure 26 to see typical installation of insulating boots). If boots are specified, they are provided for field completed shipping split joints and are shipped in the location where they will finally be installed

Before removal of the boot to complete the joint, observe the location and orientation of the boot and hardware. This should make reinstallation easier.

Nylon nuts and bolts and flat washers are used to hold the boot closed after it is installed. Carefully remove the insulation boot and save all hardware.

After the bus bar joint has been properly assembled, reinstall the insulation boot. Secure the boot closed with the nylon nuts and bolts.

Bus joint insulation taping
Insulation boots are provided for repetitive bus joint conditions when optional insulation boots are required. Where boots are not provided, the bus joints must be carefully taped to the required insulation level. Refer to Figures 27 – 29.

1. Inspect bolted joints to ensure they are correctly assembled, with bolt heads in the proper direction and the proper hardware torque value. All surfaces must be free of dust, dirt or other foreign material.
2. Apply a mastic pad over nuts and bolt heads of the joint (normally 2 pads is sufficient, but 1 may cover smaller patterns). Use either a small (15-171-988-001: 3.25" x 4.50") or a large (15-171- 988-002: 4.50" x 6.50") pad most suitable for the joint involved. Remove backing and place over the joint with the adhesive side up and mold in place covering all sharp projections. Tape the pads into place with a cross pattern. When doing this, push the pads in between the bolts/nuts to remove air pockets.

Figure 27: Installation of mastic pads

Figure 28: Insulation with half-lapped tape

3. Apply half-lapped layers of 4" (102 mm) wide tape (15-171-987-002) or 1" (25 mm) wide tape (15-171- 987-001) over the joint. Each layer should overlap the bus bar insulation by at least 1.5" (38 mm). Stretching of tape 10 percent to 15 percent will help ensure a tight fit as you go around. Continue to work out any voids or air pockets (especially around the mastic pads and hardware).
4. Finish the joint with a layer of 1" (25 mm) tape (15-171-987-001), continuing to slightly stretch the tape for a tight fit. The finished joint should have a neat and professional appearance, and should feel solid when pushed or pressed in; showing that there are no voids or air pockets.

For 5 kV class equipment use two half-lapped layers of tape over mastic pads. For 7.2 kV class equipment, use three half-lapped layers of tape over the mastic pads.

Note: Avoid excessive pressure on the completed bus joint insulation. If bus joints are on standoff insulators, apply tape per the above procedures except the half-lapped tape should overlap the insulator by at least 2" (51 mm).

Figure 29: Final insulation

Figure 30: Typical cable routing in SIMOVAC controllers

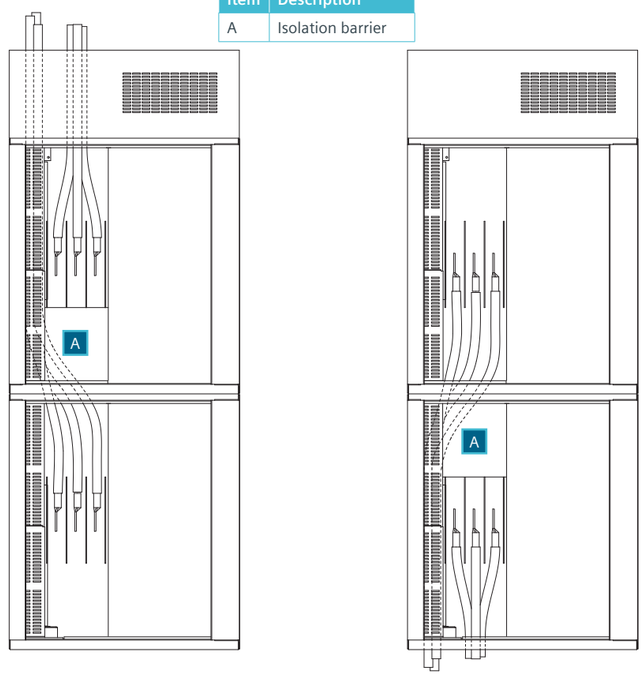

Item	Description
A	Isolation barrier

Primary cable connections
The load-cable terminations are located in the left rear of the starter compartment and are fully accessible from the front of the equipment. SIMOVAC controllers allow approximately 18" (457 mm) of clear cable termination space for cables having a maximum bend radius of 17" (432 mm). Each SIMOVAC 12SVC400 controller can accept one 500 kcmil or two 4/0 load cables per phase as a maximum.

Each SIMOVAC 12SVC800 controller can accept one 750 kcmil or two 500 kcmil cables per phase maximum.

The locations where primary cable entrances are located (either on the top plate or floor plate as shown earlier) have removable covers that must be prepared with conduit hubs or similar entrance fittings and reinstalled. All primary and secondary cable entrance covers supplied with the controller must be properly reinstalled after drilling to allow for cable entry. The bottom cable entry cover plates are painted white for ease in identifying them.

Figure 30 shows the routing of cables for stacked SIMOVAC controllers.

In the case of sealing conduits, the materials used to seal around the perimeter of the equipment are not appropriate. The use of flame-resistant electric cable or duct-sealing system is recommended. Fittings intended for use in hazardous (or similarly classified) environments should be suitable.

For SIMOVAC-AR controllers, all conduits or other openings should be sealed to prevent arcing by-products from entering conduit system.

Important: For SIMOVAC-AR arc-resistant controllers, the removable covers are required to maintain the arc-resistant capabilities of the equipment and must be reinstalled.

Line-side connections, when the compartment does not contain a controller, are possible using the same locations depending upon the size and number of cables. In some cases, an incoming line section may be required.

The incoming line sections can accommodate top or bottom entry cable or bus connections and are either 18" (457 mm) or 36" (914 mm) wide as standard. They can contain auxiliary medium-voltage devices, such as: voltage transformers, ground sensors or surge devices, in SIMOVAC-AR lineups they are classified as arc-resistant, as defined in ANSI/IEEE C37.20.7, have been qualified via testing to carry a type 2B accessibility rating.

Primary cable terminations
Insulation of cable connections to SIMOVAC controllers reduces the likelihood of occurrence of arcing faults. In addition, insulation of terminations may be required to maintain the dielectric withstand capability of the installed equipment. Insulation of terminations is mandatory if clearance between bare live parts of different phases, or between bare live parts and ground is less than 3.5" (89 mm) for up to 7.65 kV or 6.0" (152 mm) for 15 kV. A typical termination configuration is shown in Figure 31 (with optional ground studs installed).

Note: Recommendations of the cable supplier should be followed for installation procedures and materials.

Any termination for an insulated power cable must provide certain basic electrical and mechanical functions. These essential requirements include the following:

1. Connect the insulated cable conductor to the bare conductor in the equipment to provide a current path.
2. Physically protect and support the end of the cable conductor, insulation, shielding system, and overall jacket, sheath, or armor of the cable.
3. Effectively control electrical gradients to provide both an internal and external dielectric strength to meet desired insulation levels for the cable system.

The most common method to control the electrical stresses at the termination of the cable end of shielded cables is to gradually increase the total thickness of insulation at the termination by adding insulating tape or a preformed insulating component, in the form of a cone. This construction is commonly referred to as a stress cone. The cable shield is carried up the cone surface and terminated at a point near the largest diameter of the cone.

The following general recommendations are offered for proper cable termination in the SIMOVAC controllers:

1. Position the cables for maximum clearance between phases, ground, and other cable wire runs as shown in Figure 32 on page 52.
2. Avoid any possible contact between low-voltage wires and medium-voltage cables.
3. Prepare cable terminations in accordance with the cable manufacturer's instructions.
4. If contact between the cable and adjacent bus cannot be avoided, tape the bus to approximately 5/32" (4 mm) thickness in the immediate vicinity of the cable contact point so that the surface creep distance from the cable to the bare bus bar is at least 3.5" (89 mm).

Because of considerable variations in installation requirements and available cables, as standard, Siemens furnishes cable termination pads, where the bus drilling is configured to accommodate cable terminals with hole patterns in accordance with NEMA CC 1 standards. Optional cable conductor lug connectors are available. All insulating and terminating materials other than terminal lugs are to be furnished by the purchaser.

Item	Description
A	Purchaser's cables
B	Optional ground studs
C	Load cables to contactor (factory installed)

Figure 31: Typical outgoing connections

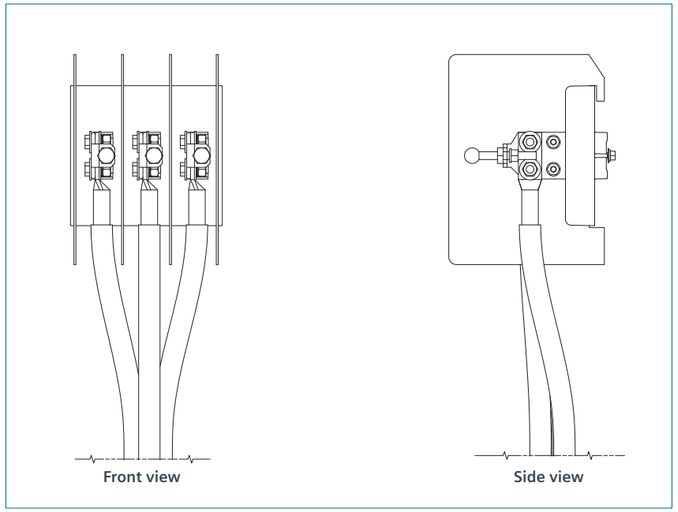

Figure 32: Typical outgoing connections

Secondary control wiring connections

Secondary control wiring is installed and tested at the factory. Wiring at shipping splits can be readily connected by referring to wire markings. These wires are not terminated and are of sufficient length to be routed to their termination point after the sections are bolted together. Terminals for these leads are furnished by the purchaser to suit the available crimping tools. Terminal block hardware is furnished with the controller. All wiring diagrams needed for installation are furnished in advance.

Wires can be easily traced on wiring diagrams furnished for the equipment. Each device is illustrated and identified with a letter. Each terminal on each device is identified by an alphanumeric code. The wire list adjacent to each device on the diagram indicates the device and terminal number to which each wire is connected at the next connection point.

All secondary control wiring installed by the factory is neatly bundled and attached to the enclosure. Make all field connections in a similar manner. Use plastic or nylon ties to secure all field installed wires to the structure. Check that the contactor, its components and the hinged front panel clear any additional wiring installed.

For SIMOVAC-AR controllers these areas have removable covers that must be prepared with conduit hubs or similar entrance fittings and reinstalled to maintain the arc-resistant integrity of the design. All primary and secondary cable entrance covers supplied with the controller must be properly reinstalled after drilling to allow for cable entry. All conduits should be sealed to prevent arcing byproducts from entering the conduit system. In the case of sealing conduits, the materials used to seal around the perimeter of the equipment are not appropriate. The use of a flame-retardant electric cable or duct-sealing system is recommended. Fittings intended for use in hazardous (or similarly classified) environments should be suitable.

Important: For SIMOVAC-AR arc-resistant controllers, the removable covers are required to maintain the arc-resistant capabilities of the equipment and must be reinstalled.

Grounding

The frame of each controller must be electrically grounded. This connection must be made before making power connections. A common ground bus is incorporated in all sections for grounding the equipment during installation. The ground bus extending through the controller is accessible in the front area of each section as seen in Figure 23: Ground bus connection at shipping split on page 46. The control and instrumentation circuits are grounded to the enclosure. This connection can be temporarily removed for test purposes, but it must be reconnected before the controller is placed into operation.

Provisions for connecting the ground bus to the substation ground must be made in such a manner that a reliable ground connection is obtained. Consult latest National Electrical Code (NFPA 70) for ground connection requirements.

Inspection and testing

Pre-energization inspection

Type SIMOVAC non-arc-resistant and type SIMOVAC-AR arc-resistant controllers

DANGER

Hazardous voltages.

Will cause death, serious injury or property damage.

Disconnect, lockout and ground incoming power and control voltage sources before beginning work on this or any other electrical equipment.

All pre-energization checks outlined in this instruction manual must be performed before the equipment is energized. This equipment should be energized by qualified personnel only.

Type SIMOVAC-AR arc-resistant controllers

DANGER

Arc flash and explosion hazard.

Will cause death, serious injury or property damage.

No equipment can completely eliminate the risk of arc flash.

SIMOVAC-AR equipment is not arc-resistant unless all of the following conditions are met:

1. All pressure relief devices are free to operate as designed.
2. The fault energy available to the equipment does not exceed the internal arcing short-circuit current rating and rated arcing duration of the equipment.
3. There are no obstructions around the equipment that could direct the arcing exhaust products into an area intended to be protected.
4. The equipment is installed in accordance with the information in the instruction manuals and drawings.

Before the equipment is energized, it must be thoroughly inspected and tested and any deviations need to be corrected.

Check the following points:

1. Remove all blocks or other temporary holding means used for shipment from all component devices in the controller interior.
2. Retighten all accessible connections in accordance with the torque values provided in the maintenance section of this instruction manual.
3. Check the integrity of the bus supports.
4. Check that high-voltage connections are properly insulated.
5. Check the enclosure to see that it has not been damaged and that electrical spacing has not been reduced.
6. Compare all circuits for agreement with the wiring diagrams which accompany the controller.
7. Make certain that internal wiring is clear of bus, and all power cabling is physically secured to withstand the effects of the largest fault current which the supply system is capable of delivering.
8. Verify that all ground connections have been made properly. If sections of the controller were shipped separately, they must be connected in a manner to assure a continuous ground path.
9. Check all devices for damage.
10. Be sure that each motor is connected to its intended starter.
11. Ensure that fuse rating is in agreement with the rating specified in the controller data label and that all fuses are installed correctly.
12. Ensure that all contactors are checked and prepared per instruction manuals.
13. Manually exercise all operating mechanisms, interlocks, contactors, magnetic devices, and other devices to make certain that they are properly aligned and operate freely.
14. With all loads disconnected, exercise all electrically operated devices with test power to determine that they operate properly. Refer to the wiring diagrams for the required control voltage, frequency, and test power terminal designations required to test the contactor. For the contactor, this should also include tests at the lower limits of pickup.
15. Test the ground overcurrent protection system (if furnished) functionality.
16. Set all devices with adjustable current and/or voltage settings to proper values.
17. Ensure that overload relay current range and setting is in agreement with the full load current and service factor shown on the nameplate of each motor, taking into account the current transformer (CT) ratio used in the controller.
18. Install any necessary CT circuit wiring, and remove CT short circuiting jumpers installed for shipment. (Do not remove CT short circuiting jumpers if no load circuit is connected to the CT). If short circuiting type terminal blocks are provided, assure that short circuiting screws are removed or shorting links are in the open position. Check each current transformer secondary circuit for continuity through its protective devices to ground. Do not operate a motor controller with a current transformer's secondary circuit open.
19. Verify that all vent areas are clean and free of shipping or construction material.
20. To prevent possible damage to equipment or injury to personnel, check that all parts and barriers that may have been removed during wiring and installation have been properly re-installed.
21. Before closing the enclosure, remove all metal clips, scrap wire, and other debris from the controller interior. Remove any accumulation of dust or dirt, clean out the controller by using a brush, vacuum cleaner or clean lint-free rags. Do not used compressed air, as it will only redistribute contaminants on other surfaces.
22. Install covers, close doors, and make certain that no wires are pinched and that all enclosure parts are properly aligned and all doors are closed and securely latched properly. Hardware for doors with $^{3}/_{8}$-16 hardware torque is 25-40 lbf · ft (34 -54 N·m).
23. For SIMOVAC-AR arc-resistant controllers:
    A. Ensure that the top mounted pressure relief channel (PRC) and exhaust plenum are installed properly and all hardware is installed and torqued properly.
    B. Verify that all pressure relief devices are free to operate as designed.
    C. Verify that any obstructions around the equipment that could direct the arcing exhaust products into an area intended to be protected have been removed.

Important: Exhaust plenum must be routed outside the equipment room and to an area where personnel will not be present when the equipment is energized.

24. Make sure that all current-carrying parts outside the controller have adequate current-carrying capacity and are correctly insulated in accordance with the requirements of the National Electrical Code. All electrical connections should be made carefully per the wiring diagram furnished with the equipment. Tighten all terminals to the recommended torque values and use the recommended crimping tools if crimp lugs are supplied.

Dielectric test

⚠ CAUTION

Excessive test voltages.

May result in damage to equipment.

Do not perform dielectric tests at test voltages exceeding the ratings of the tested equipment.

⚠ DANGER

Hazardous voltages.

Will cause death or serious injury.

Follow safe procedures. Exclude necessary personnel. Use safety barriers. Keep away from equipment during application of test voltages. Dielectric or Megger* testing should only be conducted by qualified personnel. Refer to dielectric test equipment instructions for safety instructions.

* Megger is a registered trademark of Megger Group, Ltd.

⚠ WARNING

Vacuum interrupters may emit X-ray radiation.

Will cause death or serious injury.

Excessive dielectric test voltage can cause X-radiation to be emitted from vacuum interrupters.

Refer to vacuum contactor instruction manual for dielectric test procedures applicable to the vacuum contactor.

Note: Do not use dc high-potential testers incorporating half-wave rectification. These devices produce high-peak voltages.

These high voltages will produce X-ray radiation. These devices also show erroneous readings of leakage current when testing vacuum interrupters.

An insulation-resistance test is made on the high-voltage circuit to be sure that all connections made in the field are properly insulated. An insulation-resistance test is also advisable on the control circuit.

An ac dielectric test, at 2.0 times the nominal system voltage, for one minute, should be performed between all phases and from all phases to ground prior to energizing the equipment.

Be sure to disconnect from the circuit any devices (control power transformer, surge limiters, surge arresters, etc.) which could be damaged by the test voltage. For reduced-voltage, autotransformer (RVAT) controllers, disconnect the autotransformer from the circuit before conducting high-potential test. Voltage transformers, control power transformers, surge arresters and surge capacitors must be disconnected during this test, and contactors must be in the closed position.

If a high-potential test set is not available, a Megger test at 1,000 volts is a suitable second choice.

A high-potential test is not recommended on SSRVS circuits due to potential damage to the SCR circuits. A high-potential test is recommended on the vacuum contactor, disconnected from the soft-starter circuit. For assemblies including SSRVS controllers, refer to the additional information on testing in the SSRVS instruction manual.

A dielectric test on secondary and control circuits should be made for one minute at 1,125 Vac or 1,590 Vdc. These voltages are in accordance with NEMA and UL standards. Certain control devices, such as motors and motor circuits, should be tested at 675 Vac. Electronic devices should be tested at the voltages specified in the instruction manual for the electronic device.

Since wide variations can occur in insulation values because of atmospheric conditions, contamination and type of test equipment, discrete values for acceptability cannot be given. However, making and recording tests on new equipment, and again at regular intervals, will give a comparative indication of change in the condition of insulation. Maintaining a permanent record of these values should be part of the maintenance program.

Field dielectric tests are also recommended when new units are added to an existing installation or after major field modifications. The equipment should be put in good condition prior to the field test. It is not expected that equipment be subjected to these tests after it has been stored for long periods of time or has accumulated a large amount of dust, moisture or other contaminants without being first restored to good condition.

Energizing equipment (placing equipment into service)

Type SIMOVAC non-arc-resistant and type SIMOVAC-AR arc-resistant controllers

⚠ DANGER

Hazardous voltages.

Will cause death, serious injury or property damage.

Disconnect, lockout and ground incoming power and control voltage sources before beginning work on this or any other electrical equipment.

All pre-energization checks outlined in this instruction manual must be performed before the equipment is energized. This equipment should be energized by qualified personnel only.

Type SIMOVAC-AR arc-resistant controllers

⚠ DANGER

Arc flash and explosion hazard.

Will cause death, serious injury or property damage.

No equipment can completely eliminate the risk of arc flash.

SIMOVAC-AR equipment is not arc-resistant unless all of the following conditions are met:

1. All pressure relief devices are free to operate as designed.
2. The fault energy available to the equipment does not exceed the internal arcing short-circuit current rating and rated arcing duration of the equipment.
3. There are no obstructions around the equipment that could direct the arcing exhaust products into an area intended to be protected.
4. The equipment is installed in accordance with the information in the instruction manuals and drawings.

In order to minimize risk of injury or damage, or both, there should be no load on the controller when it is initially energized. This can be accomplished by turning off all of the downstream loads, including those such as distribution equipment and other devices which are remote from the controller.

The equipment should be energized in sequence by starting at the source end of the system and working towards the load end. In other words, energize the incoming power to the controller or group of controllers, then close the incoming line load-interrupter switch or circuit breaker (if available) and then close the starter isolating switch.

After all disconnect devices have been closed, loads such as motors may be turned on to verify that the system operates as intended by energizing the appropriate contactor.

A recommended procedure to place equipment in service for the first time is as follows:

1. Check that all controllers are open and all control circuits energized.
2. Connect primary incoming power source to equipment.
3. Check all instruments, relays, meters, etc. during this time.
4. Close the isolating switch on a controller.
5. Connect as small a motor load as possible on a starter and observe the instruments.

Note: Allow several minutes before connecting additional load.

6. Gradually connect more loads to the equipment while observing instruments until all loads are connected.
7. Check for signs of overheating of primary and secondary circuits and satisfactory operation of all instruments during the first week of operation.

NOTICE

Do NOT connect power-factor correction capacitors or surge capacitors to the load (motor) circuit of a soft-start controller (SSRVS), either at the controller itself or at the motor-terminal box.

During starting, the load-side capacitors will appear as a short circuit across the silicon-controlled rectifiers (SCR) of the SSRVS, which will cause a high di/dt, and will damage the SCRs.

Capacitors, if used, must be connected to the line side of the SSRVS unit.

Connection of capacitors to the load side of an SSRVS will result in damage to the SCRs, and this damage is not covered by the equipment warranty.

NOTICE

Cables between the soft-start controller (SSRVS) and the load (motor) must be limited to no more than 660 ft (200 m) for one cable per phase, or 330 ft (100 m) for two cables per phase.

Upon startup, the capacitance of the load-side shielded cables appears as a short circuit across the silicon-controlled rectifiers (SCR) of the SSRVS, which will cause a high di/dt, and will damage the SCRs.

Damage to the SCRs resulting from excess load-side cable length is not covered by the equipment warranty.

NOTICE

Do NOT connect surge arresters to the load (motor) circuit of a soft-start controller (SSRVS), either at the controller itself or at the motor terminal box.

Surge arrester operation will impose high di/dt on the SCRs of the SSRVS, and will damage the SCRs. This damage is not covered by the equipment warranty.

Surge arresters, if used, must be connected to the line side of the SSRVS unit.

Operation

Description
The Siemens SIMOVAC controller is an integrated system of an isolating switch, a vacuum contactor and current-limiting fuses and other components arranged for convenient access within a common enclosure consisting of one or more free-standing structural sections as shown on Figures 1 and 2 on page 7. The vertical sections can be arranged to meet specific customer specifications and can be configured to accept up to two starters. The modular compartments of the section may contain starters, low-voltage/control devices or space for future starters as shown in Figures 4 and 5 on page 9.

In general, each starter unit is divided into medium-voltage and low-voltage/control compartments each with its own door as shown in Figure 33.

- The low-voltage/control compartment is isolated from the medium voltage compartment of the section with grounded metal barriers and provides ample space for relays, terminal blocks and other control circuit elements.
- The medium-voltage compartment contains the vacuum contactor, primary fuses, current transformers, voltage transformer(s) (optional), a control power transformer (if applicable), a no-load isolating switch, load connections, and has space for optional surge protection devices such as surge limiters.

Figure 33: Typical 12SVC400 controller

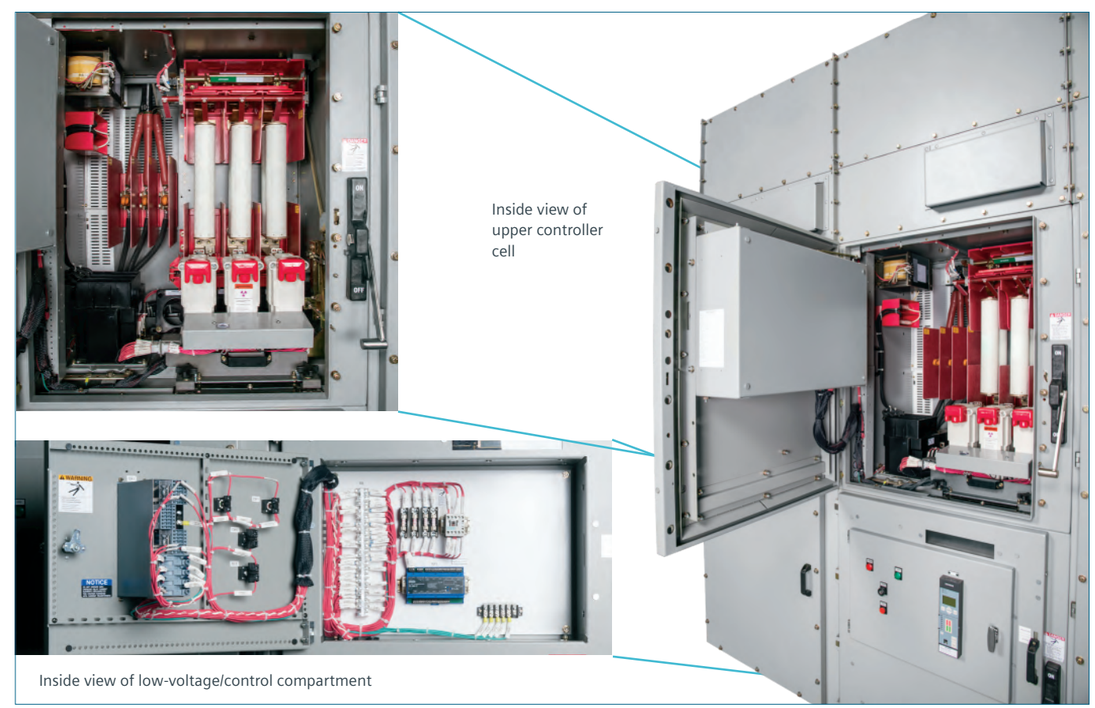

To provide personnel safety, the medium-voltage compartment door is mechanically interlocked with the critical circuit elements inside the compartment. In order to open the medium-voltage unit door, the contactor must be de-energized and the isolating switch must be in the OFF position. In the OFF position, the load-side terminals of the isolating switch are connected to ground. Only then can the door be unlatched and opened by moving the latch handle upward. Also, in order to energize the contactor or move the switch to the ON position the medium-voltage door must be closed and latched. The low-voltage/control compartment door may be opened or closed without disconnecting the power by simply turning the handle, but this must be done with caution.

In addition to these compartments, each section (except for single-section assemblies) has a main bus compartment to house the horizontal bus which extends the entire length of the controller. This compartment is located in the upper portion of the section and provides easy access for the horizontal bus to distribute the electrical power within the controller.

Each vertical section containing provisions for contactors is fed by a vertical bus system, which is connected to the horizontal bus. The vertical bus system in turn supplies power through the stab assembly on the isolating switch. The horizontal and vertical bus system is isolated from the front by means of barriers.

In single-section controllers, having no main horizontal bus, the incoming connections can be located in the normal main bus area at the top of the section.

Additionally, the type SIMOVAC-AR equipment is classified as arc-resistant, as defined in ANSI/IEEE C37.20.7, and has additional features added to the basic design that have been qualified via testing to carry a type 2B accessibility rating. These arc-resistant features provide an additional degree of protection to personnel in close proximity to the equipment in the event of an internal arcing fault while the equipment is operating under normal conditions.

The enclosure withstands the pressures and elevated temperatures of an internal arcing fault and directs the hot gases and burning particulates into the top-mounted pressure relief chamber (PRC). These arc by-products are then vented to the outside environment through an exhaust plenum system.

In cases where a transition section is used to close couple SIMOVAC-AR controllers to Siemens type GM-SG-AR medium-voltage switchgear, the hot gases and burning particulates are directly exhausted into a common PRC for both SIMOVAC-AR controllers and GM-SG-AR switchgear, before being vented to the outside thru a common exhaust plenum.

Note: Enclosures used to couple type SIMOVAC-AR controllers to other equipment (for example, transition sections, transformer throats, bus ducts, etc.) as well as specialized vertical sections within a lineup of type SIMOVAC-AR equipment that have not been qualified for resistance to internal arcing are not considered to be arc-resistant.

Controller schematic diagrams

The following are typical control schematic diagrams for the basic SIMOVAC controller types (both magnetically held and mechanically latched).

Figure 34: Type FVNR starter schematic (magnetically held)

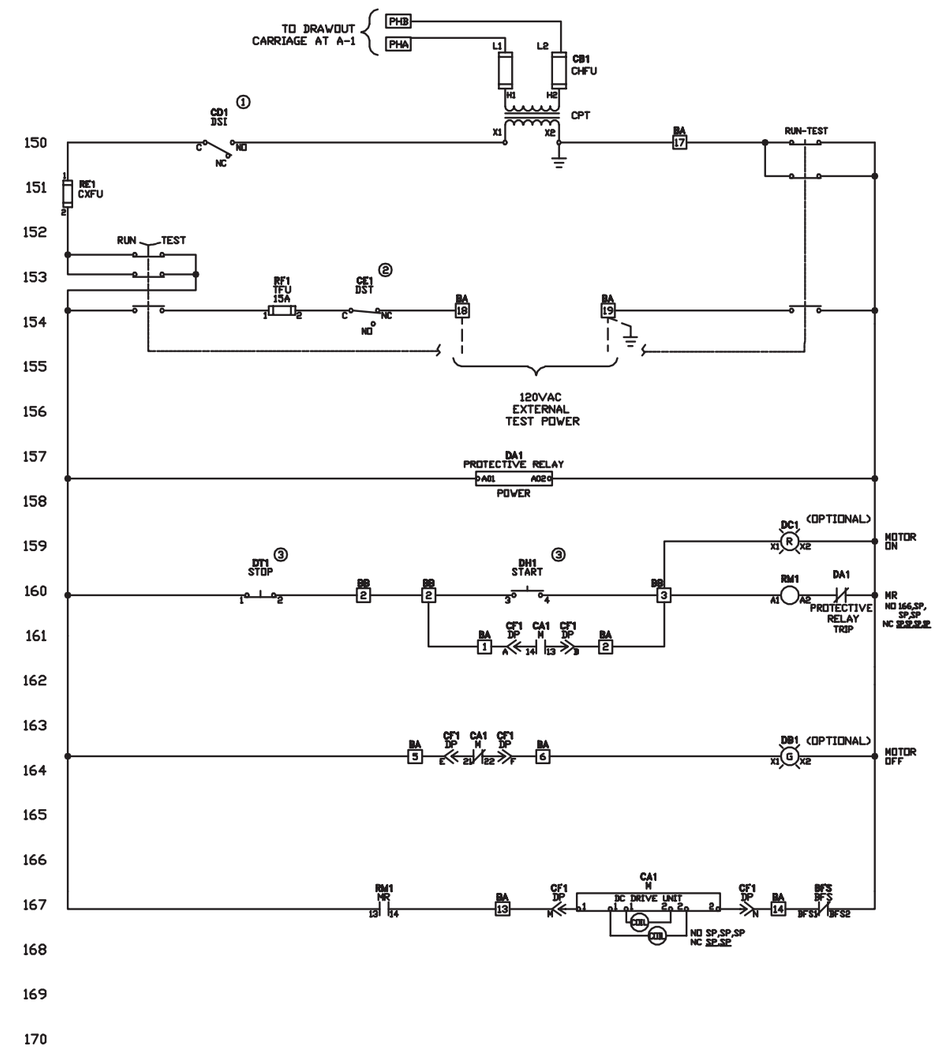

Footnotes:

1. DSI opens to disconnect control circuit when isolating switch is open. DSI shown with isolating switch in open position.
2. DST closes to connect test power to control circuit when isolating switch is open and grounded. DST is shown with isolating switch in open and grounded position.
3. If a remote pushbutton station is used, connect 'START' between terminals 2 and 3. Remove jumper J1 from terminals 1 and 2, and connect 'STOP' between terminals 1 and 2.

Figure 35: Non-motor controller with latched contactor and blown fuse trip and capacitor trip options schematic

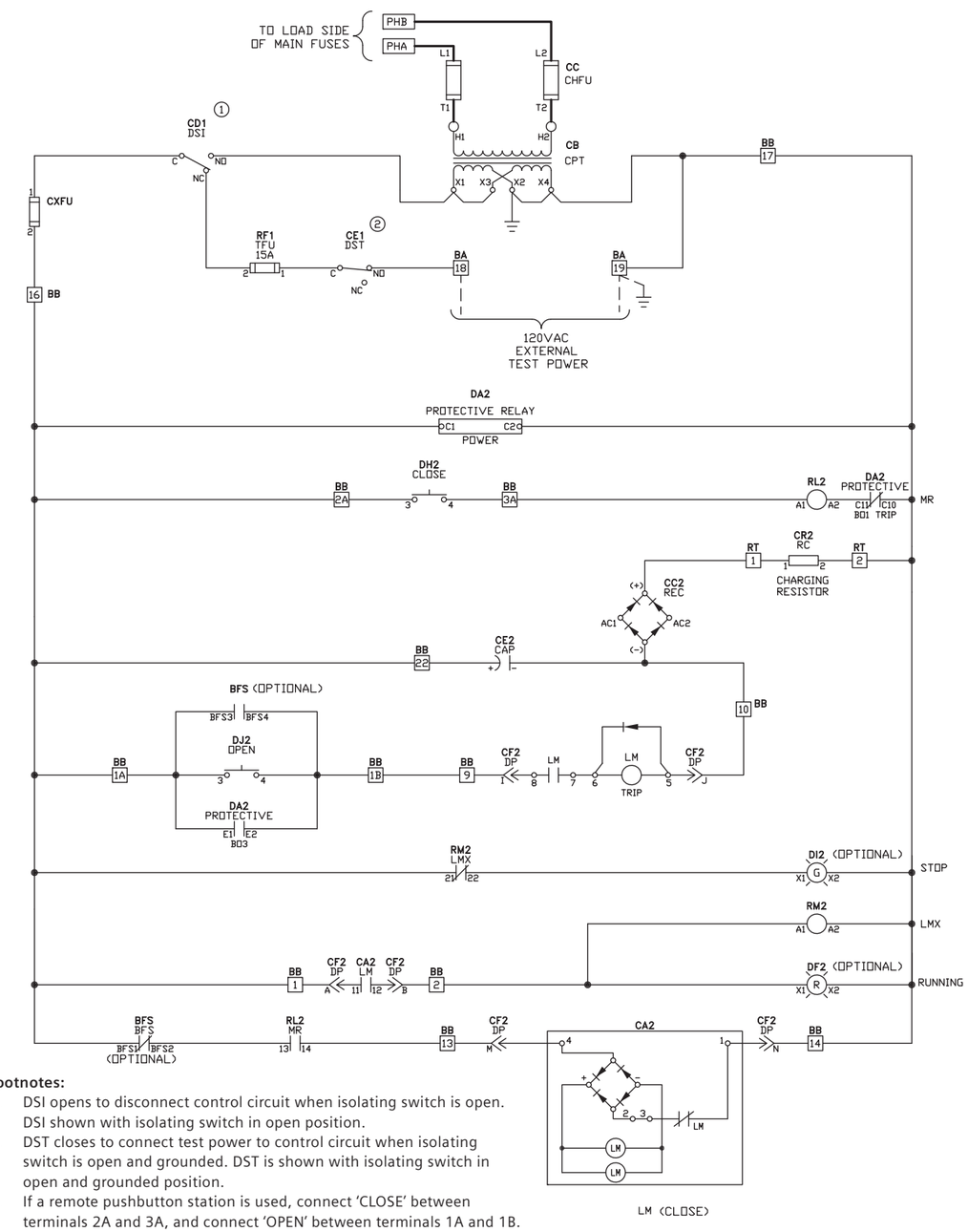

Footnotes:

1. DSI opens to disconnect control circuit when isolating switch is open. DSI shown with isolating switch in open position.
2. DST closes to connect test power to control circuit when isolating switch is open and grounded. DST is shown with isolating switch in open and grounded position.
3. If a remote pushbutton station is used, connect 'CLOSE' between terminals 2A and 3A, and connect 'OPEN' between terminals 1A and 1B.

Figure 36: Type FVR reversing starter schematic (magnetically held)

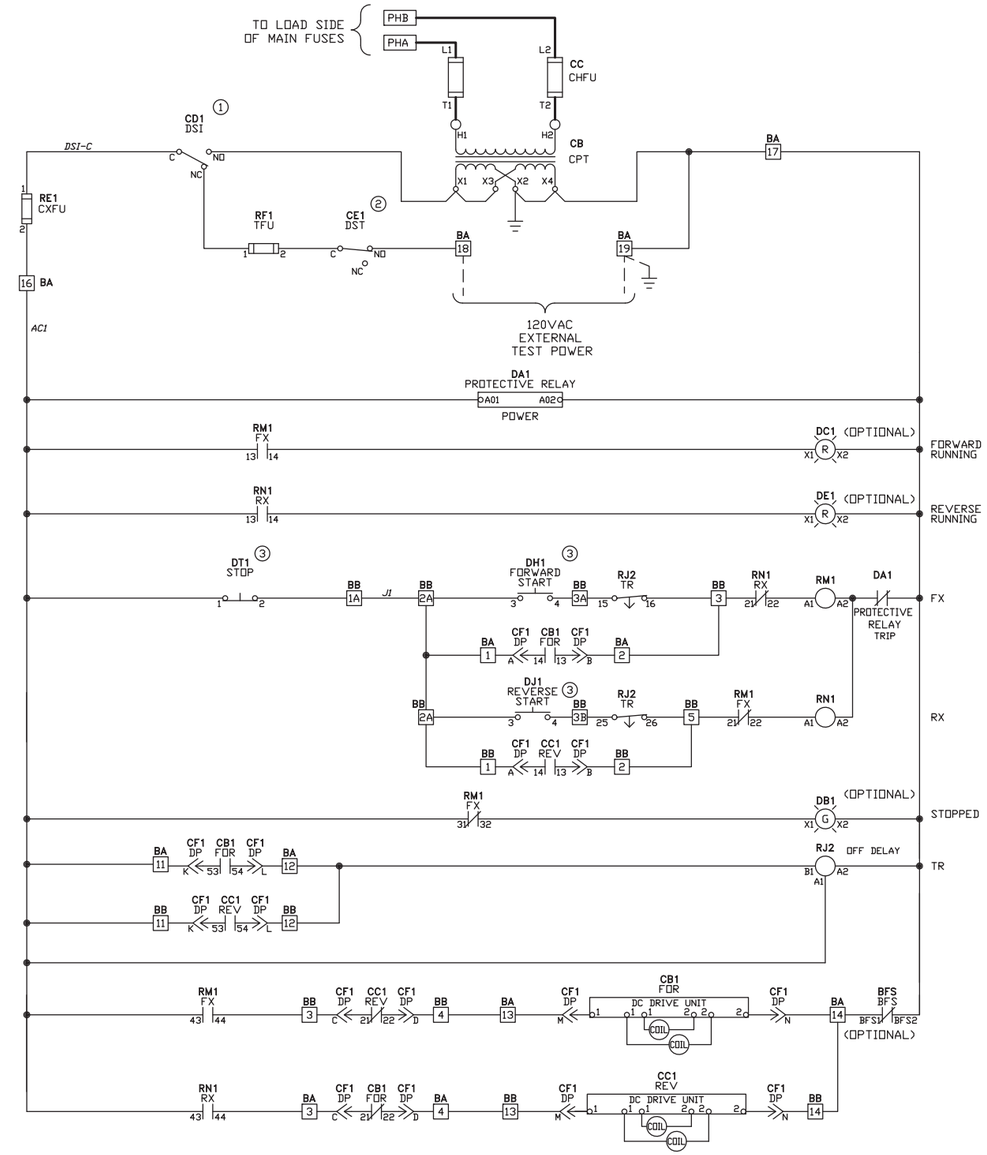

Footnotes:

1. DSI opens to disconnect control circuit when isolating switch is open. DSI shown with isolating switch in open position.
2. DST closes to connect test power to control circuit when isolating switch is open and grounded. DST is shown with isolating switch in open and grounded position.
3. If a remote pushbutton station is used, connect 'FORWARD START' between terminals 2A and 3A, and 'REVERSE START' between terminals 2A and 5. Remove jumper J1 from terminals 1A and 2A, and connect 'STOP' between terminals 1A and 2A.

Figure 37: Typical non-motor controller with latched contactor and electrical trip option schematic

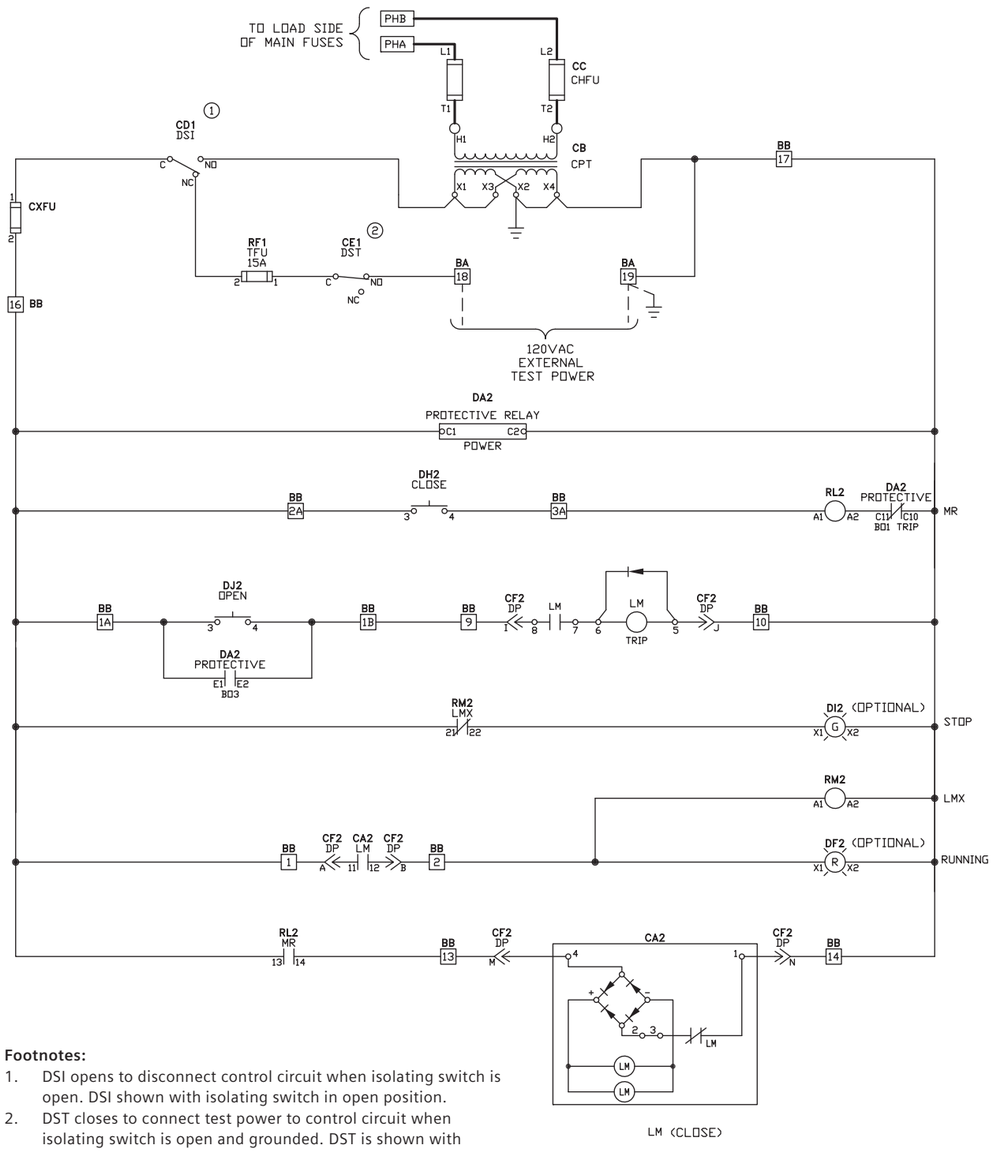

Footnotes:

1. DSI opens to disconnect control circuit when isolating switch is open. DSI shown with isolating switch in open position.
2. DST closes to connect test power to control circuit when isolating switch is open and grounded. DST is shown with isolating switch in open and grounded position.
3. If a remote pushbutton station is used, connect 'CLOSE' between terminals 2A and 3A and connect 'OPEN' between terminals 1A and 1B.

Vacuum contactors

SIMOVAC controllers use Siemens type 12SVC400 and 12SVC800 vacuum contactors. The vacuum contactors provide the advantage of long mechanical and electrical life with low maintenance and are essentially immune to adverse atmospheric environments. They are suitable for loads of all types including three-phase motors, transformers and capacitors. These contactors can be used with 5 kV or 7.2 kV (as appropriate) power fuses rated 2R through 57X and 10E through 900E. Type 12SVC800 contactors with single-barrel, double-barrel or triple-barrel fuses must be in one-high controllers while type 12SVC400 contactors with single or double barrel fuses can be two-high controllers. Since interruption is accomplished completely within the vacuum interrupters, items such as arc chutes, blowout coils and pole plates are not required with vacuum contactors. Surge suppressors (surge limiters) are sometimes furnished at the controller load terminals to limit transient over voltages caused by multiple re-ignitions which may occur due to the use of vacuum interrupters under certain system conditions.

Type 12SVC800 (720 A) vacuum contactors

Figure 38 shows the 12SVC800 contactor. This contactor provides the advantage of long mechanical and electrical life with low maintenance.

The armature of the contactor which contains the main coil drive is installed beneath the vacuum interrupters on the base frame of the contactor. The contactor has three main poles, each consisting of a sealed vacuum interrupter which is mounted on a track-resistant insulating support molding. The stationary and movable power contacts located inside the vacuum interrupter use low-surge contact materials, which exhibit low current chopping levels reducing switching overvoltages. A stainless steel bellows attached to each movable contact ensures a complete seal and maintains vacuum integrity.

The principle components of the 12SVC800 contactor are:

1. Molded insulating support frame
2. Vacuum interrupters
3. Insulating flange
4. Armature (not shown)
5. Auxiliary switch
6. Stopper (not shown)
7. Rotating shaft
8. Closing coil (inside mounting base)
9. Contact wear gauge (storage location)
10. Line and load terminals
11. Mounting base
12. Mechanical latch (if applicable) (not shown)
13. ON/OFF indicator
14. Ground connection
15. Drive unit/control circuit terminal block

The type 12SVC800 contactors used in SIMOVAC controllers are fixed mounted only; there is no withdrawable option available. The contactor is designed to mount to a flat, horizontal surface.

The type 12SVC800 contactor is equipped with an ON/OFF indicator located on the front, right side of the contactor. The position of the main contacts of the contactor is indicated by a pointer that points to ON (red) or OFF (green) as shown in Figure 39.

The contactor is grounded in accordance with UL 347 requirements. The contactor ground terminal is located on the left side, front of the contactor as shown in Figure 38.

If the ground is removed for replacement or repair of the contactor, the ground connection must be reconnected before power is applied to the contactor.

If the control power connections are removed, they must be reconnected before power is applied to the contactor. Control circuit wiring is connected to the contactor at the drive unit located on the bottom frame on the front of the contactor. Either ac or dc supply voltage may be connected to the drive unit. The optional latched trip circuit uses dc as standard power. When a latched contactor is operated using ac power, it is recommended that a capacitor trip device be used.

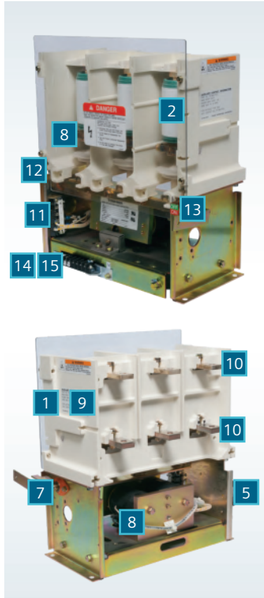

Figure 38: Type 12SVC800 (720 A) contactor

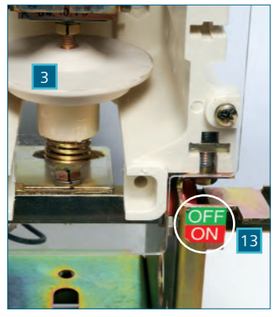

Figure 39: ON/OFF position indicator on type 12SVC800 (720 A) contactor

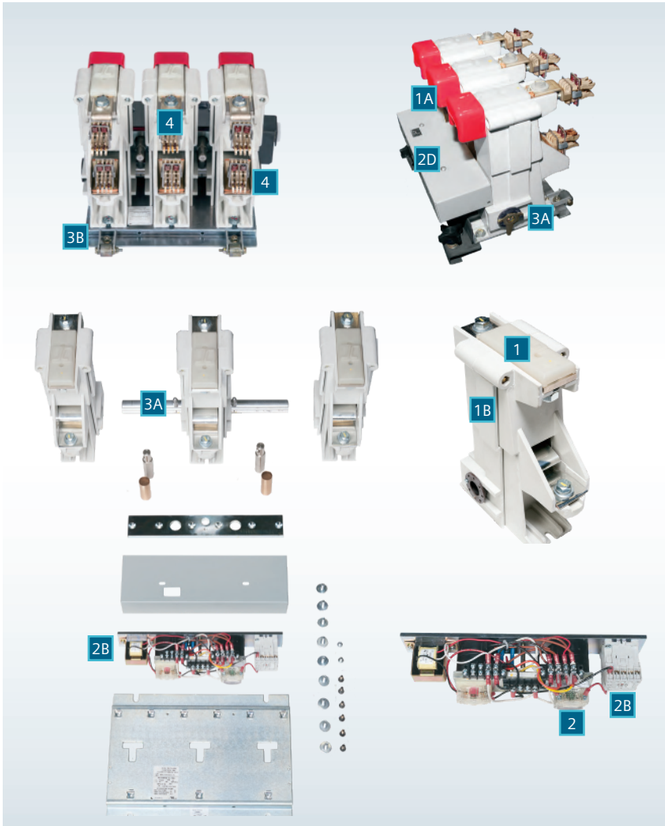

Figure 40: Type 12SVC400 (400 A contactor)

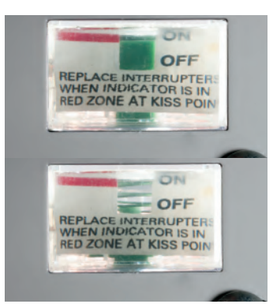

Figure 41: Type 12SVC400 (400 A) contactor ON/OFF and contact wear indicator

The contact arms for the type 12SVC400 contactors are silver-plated copper bars that are bolted to connectors in the controller compartment. Contactors can also be provided (in the plug-in withdrawable option) with sliding disconnect fingers that interface with the enclosure connectors to eliminate the need to install fasteners when installing the contactor.

The type 12SVC400 contactor is equipped with a combined contact wear and ON/OFF indicator located on the front of the contactor. The stroke of the contactor is indicated by a narrow green bar visible in the lens that expands as the contactor closes from the OFF to its fully closed position or ON position as shown in Figure 41.

Type 12SVC400 (400 A) vacuum contactors

Figure 40 shows the 12SVC400 contactor. It is a modular design using high strength, molded pole housings all on a common base for ease of handling.

The principle components are:

1. Pole or phase assembly
   A. Molded-insulating support
   B. Vacuum interrupter (not shown)
2. Control module
   A. Armature
   B. Auxiliary switch
   C. Closing coil (not shown)
   D. Contact wear indicator/ON/OFF indicator
3. Base assembly
   A. Rotating shaft
   B. Mounting base
   C. Mechanical latch (if applicable) (not shown)
4. Line and load terminals

The pole or phase assembly contains the vacuum interrupter, push rod as well as the opening and over-travel springs. The assembly is factory set and has no requirement for adjustment or resetting. Should the vacuum interrupter need replacing, a replacement factory phase assembly is utilized and is simply unbolted and replaced into the overall assembly.

The control module is a removable assembly containing all control components, i.e., coils, rectifier, MOV, economizing circuit, auxiliary switches, terminal board and auxiliary relay (with isolated contacts for purchaser's use). The modular concept allows for the control circuit module to be easily removed and quick replacement with a spare module.

The base interfaces with the pole assemblies to ensure proper alignment of the contactor and connections when operating. It also features a handle to aid the insertion/removal of the contactor from the enclosure and wheels for handling once outside of the enclosure. A plug is located next to the handle to connect the umbilical cord from the controller compartment to the contactor to apply control power.

⚠ WARNING

Heavy weight.

Can result in death, serious injury or property damage.

Observe all handling instructions in this instruction manual to prevent tipping or dropping of equipment.

To install the 12SVC400 contactors into the enclosure, open the contactors compartment door and lift the contactor (the contactor weighs approximately 60 lbs (27 kg)) to the compartment and rest the wheels of the base on the contactor pan as shown in Figure 42.

Figure 42: Installing type 12SVC400 (400 A) contactor

Roll the contactor forward until the base is fully inserted in the contactor pan and bottoms out in the alignment slots as shown in Figure 43. The contact arms of the contactor (for fixed-mounted contactors) should align with the holes in the compartment connectors. For plug-in contactors, the sliding primary contact fingers should be fully engaged with the compartment connectors.

Secure the contactor in the compartment by tightening the two knobs on the front of the contactor.

Figure 43: Installing type 12SVC400 (400 A) contactor - contactor fully inserted

For bolt-in contactors, install the 3/8-16 hardware through the contact arms into the captive nuts on the compartment connectors as shown in Figure 44 and torque the hardware to 25-40 lbf · ft (34-54 N·m).

Figure 44: Installing type 12SVC400 (400 A) contactor - high-voltage connections for fixed-mount design

Finally connect the compartment umbilical cord to the plug on the front of the contactor (as shown in Figure 46) to apply control power.

Figure 46: Installing type 12SVC400 (400 A) contactor - connecting compartment umbilical cord

Verify that the link lever on the contactor is in front of the latch lever on the cubicle, as shown in Figure 45: Installing type 12SVC400 (400 A) contactor - verification of interlocks. This verifies that compartment interlocks are in proper position.

Figure 45: Installing type 12SVC400 (400 A) contactor - verification of interlocks

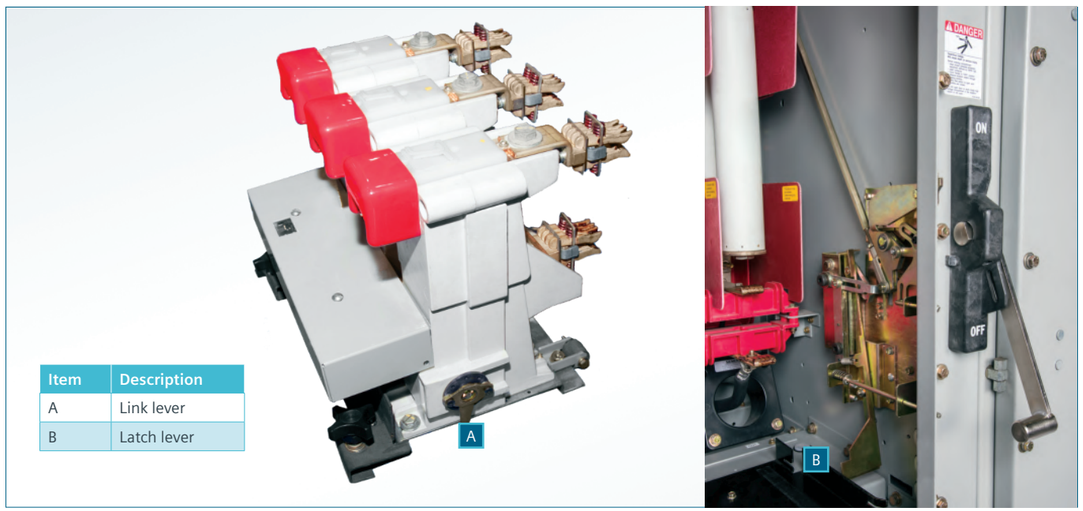

Item	Description
A	Link lever
B	Latch lever

Replacing 12SVC800 (720 A) contactor
If the type 12SVC800 (720 A) contactor must be replaced, follow these steps:

1. Disconnect control wiring and ground from contactor. Mark control wires to aid in reconnecting on reinstallation.
2. Remove the hardware from the three line-side and three load-side terminals on the rear of the contactor. Note hardware size and location for reassembly. Mark the load-side terminals with their phase identifications.
3. Remove cotter pin and clevis pin between the ON/OFF indicator and the interlock linkage. Move linkage such that it will not interfere with the contactor removal. Do not disturb the adjustment of the length of the interlock linkage.
4. Remove the four 3/8-16 bolts from the bottom corners of the contactor.
5. Lift the contactor (the contactor weighs approximately 62 lb (28 kg) and remove from the compartment.

Installing 12SVC800 (720 A) contactor
To install a type 12SVC800 (720 A) contactor, follow these steps:

1. Lift the contactor (the contactor weighs approximately 62 lb (28 kg) and place in the compartment on the mounting surface. Ensure the line-side and load-side terminals on the contactor line up with bus and cables in the compartment. Check the phase identifications of the load-side cables to be sure they are correctly oriented.
2. Install the four 3/8-16 bolts from the bottom corners of the contactor. Torque the 3/8-16 hardware to 25-40 lbf · ft (34-54 N·m).
3. Assemble the interlock linkage to the ON/OFF indicator arm with the clevis pin and cotter pin. Do not disturb the adjustment of the length of the interlock linkage.
4. Assemble hardware to the three line-side and three-load side terminals on the rear of the contactor. Torque 1/2-13 hardware to 50-75 lbf · ft (68-102 N·m) and torque 3/8-16 hardware to 25-40 lbf · ft (34-54 N·m).
5. Refer to the wiring diagram, connect the control wiring and ground to the contactor.

Figure 47: Installing/replacing type 12SVC800 (720 A) contactor

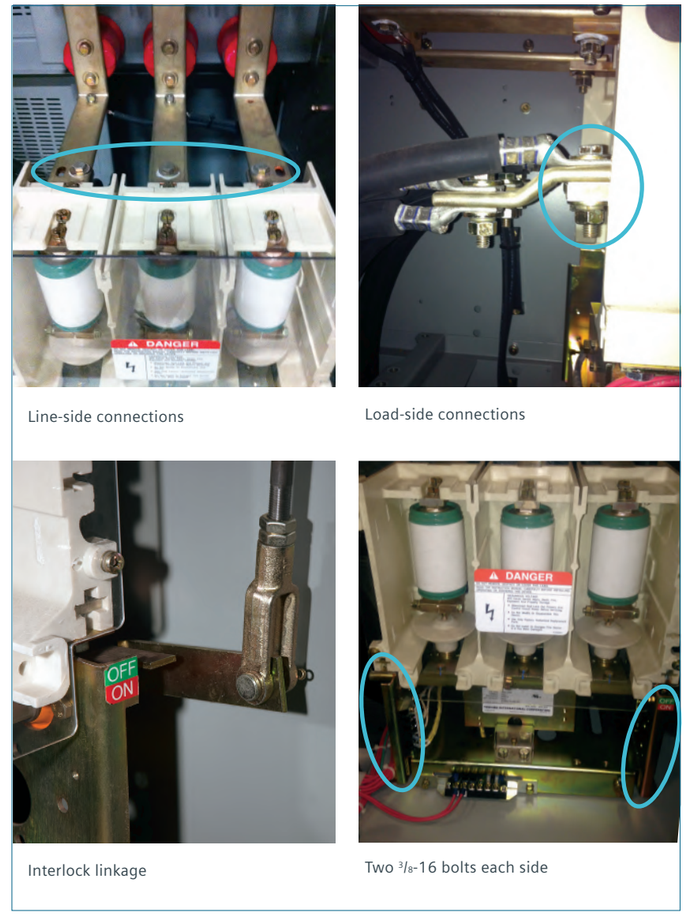

Line-side connections

Load-side connections

Interlock linkage

Two 3/8-16 bolts each side

Mechanically latched contactors (option)
Mechanically latched contactors are available for use on SIMOVAC controllers which consist of a standard type 12SVC400 or 12SVC800 contactor, with the addition of a mechanical latch assembly. The mechanical latch mechanism holds the armature of the contactor against the magnet core after the contactor main coil is energized (closed); even if control power is removed. A mechanical pushbutton on the high-voltage compartment door, when manually depressed, trips the contactor by releasing the mechanical latch.

Electrical trip using an internal trip solenoid (trip coil) is also provided. The trip solenoid may be powered from a dc source, or from a capacitor trip device which is connected to the normal ac control source. The capacitor trip device provides reliable tripping power for approximately five minutes after loss of ac control power.

⚠ DANGER

Hazardous voltages.

Will cause death, serious injury or property damage.

Do not attempt to open the high-voltage door if the isolating switch blades are in the closed (ON) position.

Isolating switch
SIMOVAC controllers feature a non-load break, three-pole, manually operated, isolating switch for manual isolation of the power circuit, in accordance with NEMA and UL standards and requirements. The switch is located in each controller compartment on the line side of the main power fuses as shown in Figure 48.

To close the isolating switch, close and latch the medium-voltage door. Move the switch handle upward vertically using a firm and continuous stroke, without teasing or hesitation. Do not stop when resistance is felt until the handle is in the full ON position. Do not leave the switch handle in a position between fully ON and fully OFF. A window on the high-voltage door just above the low-voltage door allows viewing of an indicator on the main shaft of the isolating switch and the switch blades as shown in Figure 49. This window is provided to allow visual verification of the position of the switch without the need to open the medium- or low-voltage compartment doors.

Always verify that the switch blades are in the open position (OFF) before entering the high voltage compartment.

Figure 48: Isolating switch arrangement

Figure 49: Viewing window for isolating switch position

Isolating switch operating handle and mechanical interlocks

Operation of the isolating switch is accomplished by using a mechanism actuated by an external, enclosure mounted handle. The handle can be locked in the OPEN position with up to three padlocks.

Since the isolating switch is a non-load break type switch, interrupting loads or closing into a load is not allowed. In the SIMOVAC controller, the switch handle is mechanically interlocked to the vacuum contactor such that the contactor must be in the open position before the switch handle can be moved either from the OPEN position to the CLOSED position or from the CLOSED to the OPEN position. In the OPEN position, the load side of the switch is grounded.

Medium-voltage compartment door interlock

The isolating switch handle is interlocked with the medium-voltage compartment door such that the handle cannot be moved to the CLOSED (ON) position while the door is open and the medium-voltage compartment door is not permitted to open except when the handle is in the OPEN (OFF) position.

The interlock may be defeated only by authorized personnel. Do not attempt to defeat the interlock unless all incoming power is disconnected, grounded and locked-out.

Figure 50: Isolating switch operating mechanism

DANGER

Hazardous voltages.

Will cause death, serious injury or property damage.

The door-handle interlock should be defeated only by authorized and qualified personnel in the event of a malfunction in the isolating switch handle mechanism and/or interlock system.

Never defeat this interlock if the isolating switch blades are in the closed position (ON) unless all incoming power is disconnected, grounded and locked out.

To defeat the interlock, first remove the 3/8 screw (with 9/16 wrench) from the medium-voltage door located just below the door latching handle (refer to Figure 51).

Then, using a 1/4" wide flat-head screwdriver, remove the slotted standoff from the interlock rod that is visible through the hole. Once the standoff has been removed, the door-latch handle can be moved upward to allow the medium-voltage door to be opened.

Low-voltage compartment

Figure 33 on page 59 shows the SIMOVAC controller low-voltage compartment. This compartment houses all of the secondary control devices, terminal blocks and devices, and is completely isolated from the medium-voltage compartment.

The front panel is suitable for mounting relays or other panel-mounted devices and is hinged for easy access to the connections on the rear of the devices. On SIMOVAC-AR arc-resistant versions of the controllers, the door to the low-voltage compartment can be opened to access internal components while the equipment is operating, as the design has passed the requirements of ANSI/IEEE C37.20.7 (accessibility type 2B) with the low-voltage compartment door open.

The interior panels for mounting control devices and wiring are finished bright white to allow for easy viewing of wiring and have pre-punched holes for common device mounting.

Disconnect switch interlock (DSI) auxiliary switch

All control power derived from the secondary of the control power transformer is carried from the control power transformer to the low-voltage control panel through a micro-switch mounted on the left side of the isolating switch main shaft. Refer to Figure 52.

This switch is the disconnect switch interlock (DSI). The function of this interlock is to disconnect the load from the CPT secondary prior to disengagement of the main power stabs as the isolating switch is opened. As the isolating switch handle is moved from ON to OFF, the normally closed DSI contact opens and isolates the CPT from the line side circuit.

Disconnect switch test (DST) auxiliary switch

Figure 52 shows disconnect switch test (DST) which is a micro-switch mounted near the DSI switch and is used to prevent operation of the contactor via the test power when the isolating switch is closed (in the ON position). As the isolating switch handle is moved from OFF to ON, the normally closed DST contact opens and isolates the test source from the control circuit.

Power fuses (current limiting)

ANSI R-rated are used for motor starting duty in up to 7.2 kV class E2 controllers. Time-current characteristics curves and other fuse application information for motor starting applications are identified in Table 6a on page 74.

ANSI E-rated fuses are used for most other applications. Maximum fuse size should be determined by verifying the fuse total clearing curve does not exceed the transformer damage curve. Tables 6b-6d on pages 75-76 show E-rated fuse basic technical data and identify time-current characteristics curves.

Other fuse application information for fuses is available at the web sites of the fuse manufacturer.

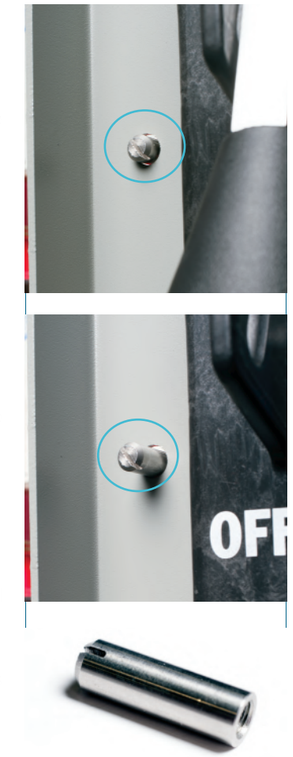

Figure 51: Defeating isolating switch/operating handle mechanical interlocks

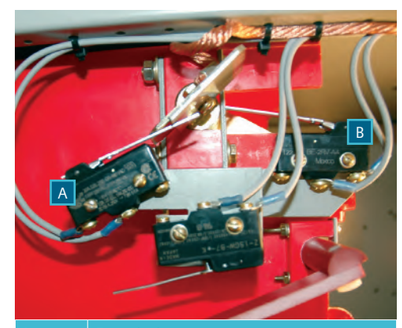

Item	Description
A	Disconnect switch test (DST)
B	Disconnect switch interlock (DSI)

Figure 52: Disconnect switch interlock (DSI) auxiliary switch and disconnect switch test (DST) auxiliary switch (photo shown with isolating switch open)

Table 6a: Typical Mersen fuse sizes for motor protection, 5 kV and 7.2 kV

Catalog number	Current desig-nation	Quantity of barrel(s)	Continuous current at 40 °C (open air)	Minimum interrupt-ing capa-bility A	Maximum interrupting kA		Fuse curves[1]		
					12SVC400 contactor	12SVC800 contactor	Minimum melt	Total clearing	Let through
48FMB2R-4G/A051B1DAR0-2R	2R	1	70	190	63 kA	Use 12SVC400	102654	102653	102652
48FMB3R-4G/A051B1DAR0-3R	3R	1	100	225	63 kA	Use 12SVC400	102654	102653	102652
48FMB4R-4G/A051B1DAR0-4R	4R	1	130	330	63 kA	Use 12SVC400	102654	102653	102652
48FMB6R-4G/A051B1DAR0-6R	6R	1	170	500	63 kA	Use 12SVC400	102654	102653	102652
48FMB9R-4G/A051B1DAR0-9R	9R	1	200	740	63 kA	Use 12SVC400	102654	102653	102652
48FMB12R-4G/A051B1DAR0-12R	12R	1	230	955	63 kA	Use 12SVC400	102654	102653	102652
48FMB18R-5G/A051B2DAR0-18R	18R[2]	2	390	1,440	63 kA	Use 12SVC400	102654	102653	102652
48FMB24R-5G/A051B2DAR0-24R	24R[2]	2	450	1,910	50 kA	63 kA	102654	102653	102652
A051B2DAR0-32R	32R	2	600	2,500	NA	63 kA	102657	102656	102655
A051B2DAR0-38R	38R[3]	2	700	3,100	NA	63 kA	102657	102656	102655
A051B3DAR0-48X	48X[3]	3	750	3,600	NA	50 kA	102657	102656	102655
A051B3DAR0-57X	57X	3	900	4,500	NA	50 kA	102657	102656	102655
A072B1DAR0-2R	2R	1	70	190	63 kA	Use 12SVC400	103813	103814	103815
A072B1DAR0-3R	3R	1	100	225	63 kA	Use 12SVC400	103813	103814	103815
A072B1DAR0-4R	4R	1	130	330	63 kA	Use 12SVC400	103813	103814	103815
A072B1DAR0-6R	6R	1	170	500	63 kA	Use 12SVC400	103813	103814	103815
A072B1DAR0-9R	9R	1	200	740	63 kA	Use 12SVC400	103813	103814	103815
A072B1DAR0-12R	12R	1	230	955	63 kA	Use 12SVC400	103813	103814	103815
A072B2DAR0-18R	18R[4]	2	390	1,440	63 kA	Use 12SVC400	103813	103814	103815
A072B2DAR0-19R	19R	1	300	1,560	NA	63 kA	720522	720523	720524
A072B2DAR0-24R	24R[4]	2	450	1,910	NA	63 kA	720522	720523	720524
A072B2DCR0-32R	32R	2	600	2,500	NA	63 kA	720522	720523	720524
A072B2DCR0-38R	38R[5]	2	700	3,100	NA	63 kA	720522	720523	720524
A072B3DCR0-48X	48X	3	750	3,600	NA	50 kA	720522	720523	720524
A072B3DCR0-57X	57X[5]	3	900	4,500	NA	50 kA	720522	720523	720524

Footnotes for table 6a:

1. Fuse curves are available at http://ep-us.mersen.com/resources/literature-library/performance_data/.
2. Maximum fuse size at 5 kV with 12SVC400 contactor is 24R for 50 kA, and 18R for 63 kA.
3. Maximum fuse size at 5 kV with 12SVC800 contactor is 57X for 50 kA, and 38R for 63 kA.
4. Maximum fuse size at 7.65 kV with 12SVC400 contactor is 24R for 50 kA, and 18R for 63 kA.
5. Maximum fuse size at 7.65 kV with 12SVC800 contactor is 57X for 50 kA, and 38R for 63 kA.

Footnotes for table 6b:

1. Fuse curves are available at http://ep-us.mersen.com/resources/literature-library/performance_data/.
2. Maximum Mersen fuse size at 5 kV with 12SVC400 contactor is 200E for 50 kA, and 175E for 63 kA.
3. Maximum Mersen fuse size at 5 kV with 12SVC800 contactor is 450E for 50 kA, and 350E for 63 kA.

Footnotes for table 6c:

1. Fuse curves are available at http://www.eaton.com. At webpage, enter the number of the fuse curve in the search box.
2. Maximum Eaton (Bussmann) fuse size at 5 kV with 12SVC400 contactor is 450E for 63 kA.
3. Maximum Eaton (Bussmann) fuse size at 5 kV with 12SVC800 contactor is 900E for 63 kA.
4. Units with Eaton 5BHCL-500E and 5BHCL-600E fuses not UL (or cUL) listed as these Eaton fuses are not UL (or cUL) listed.

Table 6b: Typical Mersen fuse sizes for general applications, 5 kV

Catalog number	Fuse rating	Quantity of barrel(s)	Maximum interrupting kA				Fuse curves[1]		
			12SVC400 contactor	12SVC800 contactor	Load-interrupter switch		Minimum melt	Total clearing	Let through
					600 A	1,200			
A055B1DAR0-10E	10E	1	63 kA	Use 12SVC400	63 kA	63 kA	720353	720352	720354
A055B1DAR0-15E	15E	1	63 kA	Use 12SVC400	63 kA	63 kA	720353	720352	720354
A055B1DAR0-20E	20E	1	63 kA	Use 12SVC400	63 kA	63 kA	720353	720352	720354
A055B1DAR0-25E	25E	1	63 kA	Use 12SVC400	63 kA	63 kA	720353	720352	720354
A055B1DAR0-30E	30E	1	63 kA	Use 12SVC400	63 kA	63 kA	720353	720352	720354
A055B1DAR0-40E	40E	1	63 kA	Use 12SVC400	63 kA	63 kA	720353	720352	720354
A055B1DAR0-50E	50E	1	63 kA	Use 12SVC400	63 kA	63 kA	720353	720352	720354
A055B1DAR0-65E	65E	1	63 kA	Use 12SVC400	63 kA	63 kA	720353	720352	720354
A055B1DAR0-80E	80E	1	63 kA	Use 12SVC400	63 kA	63 kA	720353	720352	720354
A055B1DAR0-100E	100E	1	63 kA	Use 12SVC400	63 kA	63 kA	720353	720352	720354
A055B1DAR0-125E	125E	1	63 kA	Use 12SVC400	63 kA	63 kA	720353	720352	720354
A055B1DAR0-150E	150E	1	63 kA	Use 12SVC400	63 kA	63 kA	720353	720352	720354
A055B1DAR0-175E	175E[2]	1	63 kA	Use 12SVC400	63 kA	63 kA	720353	720352	720354
A055B1DAR0-200E	200E[2]	1	50 kA	63 kA	63 kA	63 kA	720353	720352	720354
A055B2DAR0-250E	250E	2	NA	63 kA	63 kA	63 kA	720353	720352	720354
A055B2DAR0-300E	300E	2	NA	63 kA	63 kA	63 kA	720353	720352	720354
A055B2DAR0-350E	350E[3]	2	NA	63 kA	63 kA	63 kA	720353	720352	720354
A055B2DAR0-400E	400E	2	NA	50 kA	50 kA	63 kA	720353	720352	720354
A055B2D0R0-450E	450E[3]	2	NA	50 kA	25 kA	63 kA	720353	720352	720354
A055B2D0R0-500E	500E	2	NA	NA	25 kA	63 kA	720456	720455	720457
A055B3D0R0-600E	600E	2	NA	NA	25 kA	63 kA	102657	102656	102655
A055B3D0R0-750E	750E	3	NA	NA	NA	63 kA	24445	24447	24444
A055B3D0R0-900E	900E	3	NA	NA	NA	50 kA	24445	24447	24444

Table 6c: Typical Eaton (Bussmann) fuse sizes for general applications, 5 kV

5BHLE-10E	10E	1	63 kA	Use 12SVC400	63 kA	63 kA	TC70548507	TC70548607	TC70548703
5BHLE-15E	15E	1	63 kA	Use 12SVC400	63 kA	63 kA	TC70548507	TC70548607	TC70548703
5BHLE-20E	20E	1	63 kA	Use 12SVC400	63 kA	63 kA	TC70548507	TC70548607	TC70548703
5BHLE-25E	25E	1	63 kA	Use 12SVC400	63 kA	63 kA	TC70548507	TC70548607	TC70548703
5BHLE-30E	30E	1	63 kA	Use 12SVC400	63 kA	63 kA	TC70548507	TC70548607	TC70548703
5BHLE-40E	40E	1	63 kA	Use 12SVC400	63 kA	63 kA	TC70545805	TC70545905	TC70547603
5BHLE-50E	50E	1	63 kA	Use 12SVC400	63 kA	63 kA	TC70545805	TC70545905	TC70547603
5BHLE-65E	65E	1	63 kA	Use 12SVC400	63 kA	63 kA	TC70545805	TC70545905	TC70547603
5BHLE-80E	80E	1	63 kA	Use 12SVC400	63 kA	63 kA	TC70545805	TC70545905	TC70547603
5BHLE-100E	100E	1	63 kA	Use 12SVC400	63 kA	63 kA	TC70545805	TC70545905	TC70547603
5BHLE-125E	125E	1	63 kA	Use 12SVC400	63 kA	63 kA	TC70545805	TC70545905	TC70547603
5BHLE-150E	150E	1	63 kA	Use 12SVC400	63 kA	63 kA	TC70545805	TC70545905	TC70547603
5BHLE-175E	175E	1	63 kA	Use 12SVC400	63 kA	63 kA	TC70545805	TC70545905	TC70547603
5BHLE-200E	200E	1	63 kA	Use 12SVC400	63 kA	63 kA	TC70545805	TC70545905	TC70547603
5BHLE-250E	250E	1	63 kA	Use 12SVC400	63 kA	63 kA	TC70545805	TC70545905	TC70547603
5BHLE-300E	300E	2	63 kA	Use 12SVC400	63 kA	63 kA	TC70546005	TC70546105	TC70547603
5BHLE-350E	350E	2	63 kA	Use 12SVC400	63 kA	63 kA	TC70546005	TC70546105	TC70547603
5BHLE-400E	400E	2	63 kA	Use 12SVC400	63 kA	63 kA	TC70546005	TC70546105	TC70547603
5BHLE-450E	450E[2]	2	63 kA	Use 12SVC400	63 kA	63 kA	TC70546005	TC70546105	TC70547603
5BHCL-500E	500E[4]	2	NA	63 kA	Use 1,200 A	63 kA	TC66703401	TC66703501	TC66703701
5BHCL-600E	600E[4]	2	NA	63 kA	Use 1,200 A	63 kA	TC66703401	TC66703501	TC66703701
5BHCL-750E	750E	3	NA	63 kA	Use 1,200 A	63 kA	TC66703401	TC66703501	TC66703701
5BHCL-900E	900E[3]	3	NA	63 kA	Use 1200 A	63 kA	TC66703401	TC66703501	TC66703701

Table 6d: Typical Mersen fuse sizes for general applications, 7.2 kV

Catalog number	Fuse rating	Quantity of barrel(s)	Maximum interrupting kA				Fuse curves[1]		
			12SVC400 contactor	12SVC800 contactor	600 A load-interrupter switch	1,200 A load-interrupter switch	Minimum melt	Total clearing	Let through
A083B1DAR0-10E	10E	1	63 kA	NA	63 kA	63 kA	720292	720291	720295
A083B1DAR0-15E	15E	1	63 kA	NA	63 kA	63 kA	720292	720291	720295
A083B1DAR0-20E	20E	1	63 kA	NA	63 kA	63 kA	720292	720291	720295
A083B1DAR0-25E	25E	1	63 kA	NA	63 kA	63 kA	720292	720291	720295
A083B1DAR0-30E	30E	1	63 kA	NA	63 kA	63 kA	720292	720291	720295
A083B1DAR0-40E	40E	1	63 kA	NA	63 kA	63 kA	720292	720291	720295
A083B1DAR0-50E	50E	1	63 kA	NA	63 kA	63 kA	720292	720291	720295
A083B1DAR0-65E	65E	1	63 kA	NA	63 kA	63 kA	720292	720291	720295
A083B1DAR0-80E	80E	1	63 kA	NA	63 kA	63 kA	720292	720291	720295
A083B1DAR0-100E	100E	1	63 kA	NA	63 kA	63 kA	720292	720291	720295
A083B2DAR0-125E	125E	1	63 kA	NA	63 kA	63 kA	720292	720291	720295
A083B2DAR0-150E	150E	1	63 kA	NA	63 kA	63 kA	720292	720291	720295
A083B2DAR0-175E	175E	1	63 kA	NA	63 kA	63 kA	720292	720291	720295
A083B2DAR0-200E	200E	1	63 kA[2]	NA	63 kA	63 kA	720292	720291	720295
A072B2DCR0-250E	250E	2	NA	63 kA	63 kA	63 kA	720486	720487	720488
A072B2DCR0-300E	300E	2	NA	63 kA	63 kA	63 kA	720486	720487	720488
A072B2DCR0-350E	350E	2	NA	63 kA	63 kA	63 kA	720486	720487	720488
A072B2DCR0-400E	400E	2	NA	63 kA[3]	63 kA	63 kA	720486	720487	720488

Footnotes:
1. Fuse curves are available at http://ep-us.mersen.com/resources/literature-library/performance_data/.
2. Maximum Mersen fuse size at 7.65 kV with 12SVC400 contactor is 200E for up to 63 kA.
3. Maximum Mersen fuse size at 7.65 kV with 12SVC800 contactor is 400E.

Figure 53: Fuse selection guide for motor protection fuse sizes 2R-24R

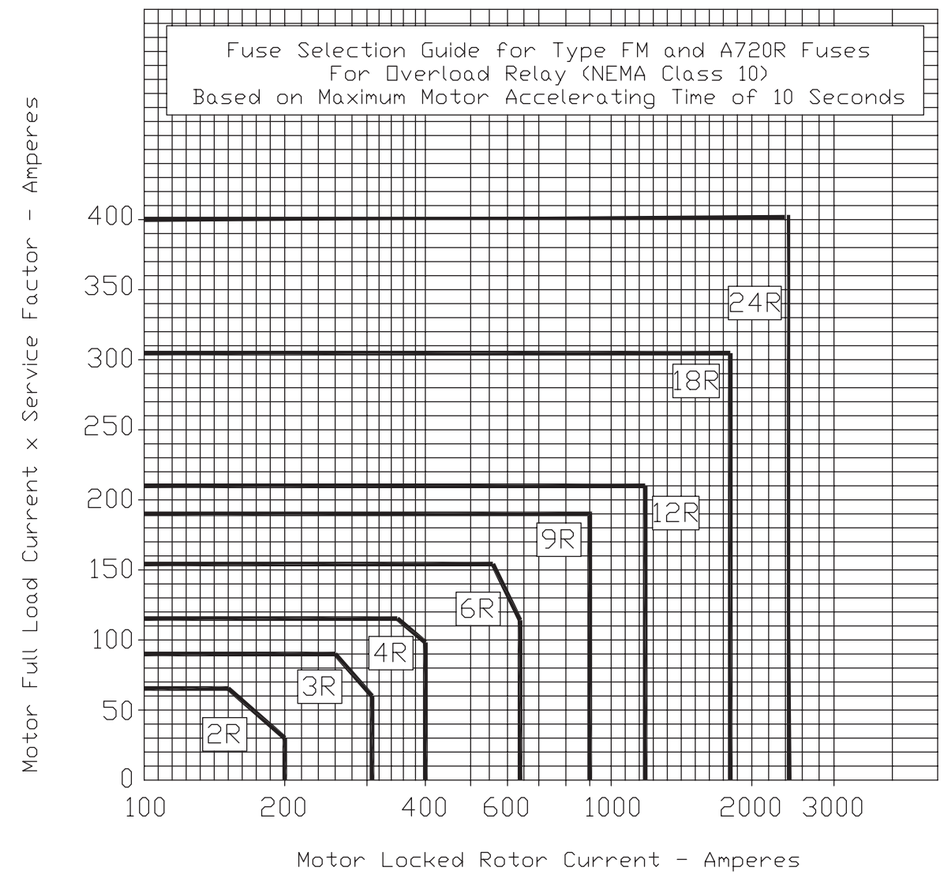

Figure 54: Maximum allowable acceleration times fuse sizes 2R-24R

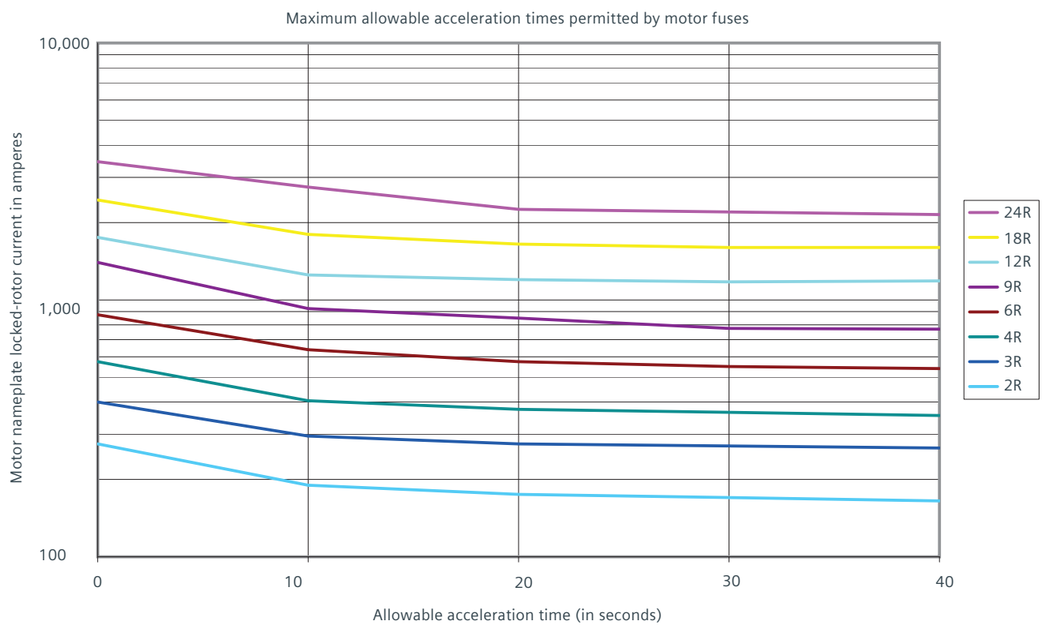

Motor with acceleration times falling below the applicable fuse curve are permitted two consecutive starts, as follows:

A. One start from ambient

B. A coast to stop

C. A second start.

Figure 55: Fuse selection guide for motor protection fuse sizes 32R, 38R, 48X and 57X

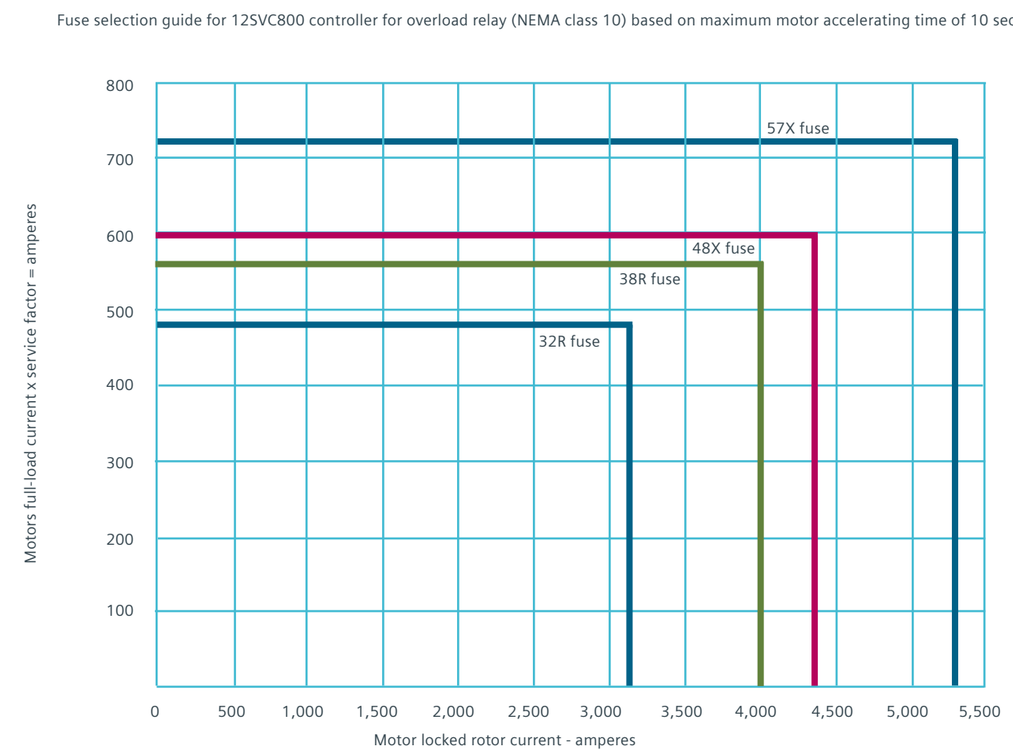

Figure 56: Maximum allowable acceleration times fuse sizes 32R, 38R, 48X and 57X

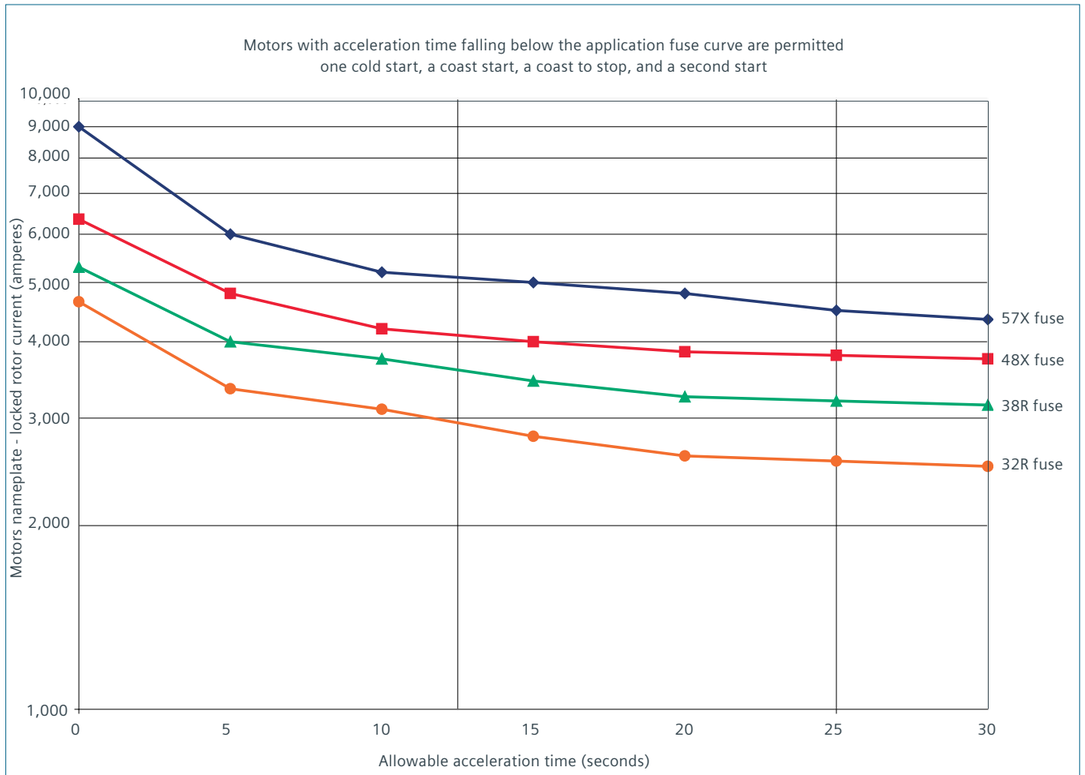

Blown fuse indicator (standard) and blown fuse trip mechanism (optional)
Each SIMOVAC controller may be optionally equipped with an anti-single-phase trip mechanism which offers protection from single phasing due to a blown power fuse. The blown fuse trip mechanism is arranged so that the opening of one or more power fuses results in de-energizing the contactor main coil, thus causing the contactor to dropout. When a power fuse blows, a plunger extends from one end of the fuse. This plunger causes the spring-loaded trip bar to rotate, and actuates a micro-switch BFS (see Figure 57). A contact on the micro-switch opens at this time and de-energizes the contactor magnet coil. For latched contactors, the blown-fuse micro-switch closes a contact in the latch circuit to similarly cause the contactor to open.

Load-interrupter switch
Figure 58 shows the manually operated, single-throw, gang-operated load-interrupter switch available in SIMOVAC assemblies for application needs with loads rated 600 A or 1,200 A. A quick-make, quick-break arcing blade combined with an arc chute provides positive, three-phase interruption of transformer magnetizing and load currents. The switch uses a quick make/quick break stored-energy operator.

The load-interrupter switch may be unfused or equipped with current-limiting fuses to provide fault-current interrupting capacity. To prevent any of the fuse discharge gases from contaminating the switch and arc-chute area, fuses are mounted below the switch.

Table 7 shows the ratings for the load-interrupter switch.

Figure 58: Fused load-interrupter switch unit

Figure 57: Blown fuse trip mechanism with blown fuse switch (BFS) (optional)

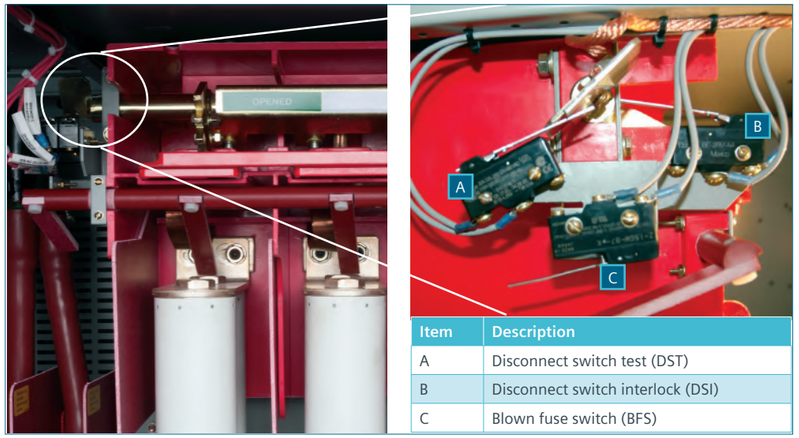

Item	Description
A	Disconnect switch test (DST)
B	Disconnect switch interlock (DSI)
C	Blown fuse switch (BFS)

Table 7: Load-interrupter switch ratings

Switch rating A	Maximum voltage kV	Fused or unfused	Symmetrical kA
600	7.2	Unfused	25
600	5.0	Fused (≤ 450E)	63
600	7.2	Fused (≤ 400E)	63
1,200	7.2	Unfused	38
1,200	5.0	Fused (≤ 900E)	63
1,200	7.2	Fused (≤ 400E)	63

Note: A fused switch should not be used on circuits sensitive to single phasing

The switch differs from a circuit breaker in that it will interrupt its full load current, but it will not interrupt overload or fault currents.

The switch is manually operated by a spring-over-center, stored energy operating mechanism through a chain drive and is equipped with an arc chute and quick-make blade. The quick-make closing and quick-break opening energy is supplied by 180 degree rotation of the operating handle. The resulting high speed closing and opening assures safe operation and long life.

Figure 59 shows the basic construction and major components of the switch.

To provide a level of personnel safety, the load-interrupter switch has the following standard features:

- When the switch is in either the open or closed position, the springs are not charged.
- A mechanical interlock prevents closing the switch if the front door of the section is not closed and properly latched (or bolted for SIMOVAC-AR arc-resistant controllers) to prevent access to the switch or fuses (if provided) while the switch is in the closed position.
- Operation of the switch requires two separate and distinct actions to prevent inadvertent operation of the switch.

Figure 59: Load-interrupter switch components

Item	Description
A	Arc chute
B	Stationary contact
C	Insulator
D	Stationary main contact
E	Quick-acting blade
F	Main switch blade
G	Hinge contact
H	Operating handle
I	Position indicators
J	Release knob

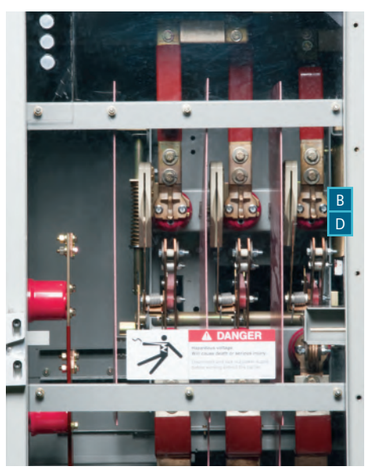

To close the switch from the open position for SIMOVAC non-arc-resistant controllers, close and latch the section door (for SIMOVAC-AR arc-resistant controllers bolt the door and torque all $^{3}/_{8}$-16 hardware to 25-40 lbf · ft (34-54 N·m).

Pull on the release knob located in the center of the operator casting to release the operating handle.

Note: Failure to pull the release knob before attempting to operate handle may cause equipment damage.

While holding the release knob, rotate the operator handle slightly to prevent the knob and locating pin from resetting (as shown in Figure 60). At that point it is no longer necessary to hold the release knob.

Continue rotating the handle 180 degrees upward to the full CLOSED position.

Conversely, opening the switch is accomplished by the same procedure by downward rotation of the operating handle.

Figure 60: Operation of load-interrupter switch

Maintenance

Introduction

DANGER

Hazardous voltages.

Will cause death, serious injury or property damage.

Disconnect, lockout and ground incoming power and control voltage sources before beginning work on this or any other electrical equipment.

DANGER

Failure to maintain the equipment could result in death, serious injury or product failure and can prevent the successful functioning of connected apparatus.

The instructions contained herein should be carefully reviewed, understood and followed.

Before performing any maintenance:

- Test all power terminals to verify that incoming power has been disconnected. Use only approved high-voltage test equipment to check voltage on power terminals.

Note: Do not attempt to measure high voltage (over 600 volts) with a volt-ohm meter.

- Check all control and secondary circuit terminals with a voltmeter to make certain that all sources of incoming control and secondary voltage have been disconnected.
- Connect safety grounds to power terminals after the system has been de-energized, and prior to working on the equipment.
- Perform all disconnecting, grounding, and lockout operations in accordance with established safety procedures.
- Follow the procedure outlined in the Pre-energization inspection section beginning on page 65 of this instruction manual before power is restored.

General

For the safety of maintenance personnel as well as others who might be exposed to hazards associated with maintenance activities, the safety related work practices of NFPA 70E, should always be followed when working on electrical equipment. Maintenance personnel should be trained in the safety practices, procedures and requirements that pertain to their respective job assignments. This instruction manual should be reviewed and retained in a location readily accessible for reference during maintenance of this equipment.

The user must establish a periodic maintenance program to ensure trouble-free and safe operation. The frequency of inspection, periodic cleaning and preventive maintenance will depend upon the operating conditions. NFPA Publication 70B "Electrical Equipment Maintenance" may be used as a guide to establish such a program.

A preventive maintenance program is not intended to cover reconditioning or major repair but should be designed to reveal, if possible, the need for such actions in time to prevent malfunctions during operation.

DANGER

Hazardous voltages.

Will cause death, serious injury or property damage.

Disconnect, lockout and ground incoming power and control voltage sources before beginning work on this or any other electrical equipment.

Inspection and maintenance intervals

DANGER

Hazardous voltages.

Will cause death, serious injury or property damage.

Disconnect, lockout and ground incoming power and control voltage sources before beginning work on this or any other electrical equipment.

Periodic inspections and maintenance are essential to obtain safe and reliable operation of the equipment. When type SIMOVAC-AR (arc-resistant) and SIMOVAC (non-arc-resistant) controllers are operated under "usual service conditions," maintenance and lubrication is recommended at five year intervals. "Usual" and "unusual" service conditions for motor controllers are defined in clause 2 of UL 347, 6th edition. Generally, "usual service conditions" are defined as an environment in which the equipment is not exposed to excessive dust, acid fumes, damaging chemicals, salt air, rapid or frequent changes in temperature, vibration, high humidity and extreme temperatures.

The definition of "usual service conditions" is subject to a variety of interpretations. Because of this, you are best served by adjusting maintenance and lubrication intervals based on your experience with the equipment in the actual service environment.

Regardless of the length of the maintenance and lubrication interval, Siemens recommends that contactors be inspected once a year or every 20,000 operations.

Recommended hand tools

Type SIMOVAC controllers use both standard imperial (U.S. customary) and metric fasteners. Imperial (U.S. customary) fasteners are used in most locations in the enclosures.

Recommended maintenance

DANGER

The use of unauthorized parts in the repair of the equipment or tampering by unqualified personnel will result in dangerous conditions that will cause death, serious injury or equipment damage.

Follow all safety instructions herein.

Periodic maintenance and lubrication should include all the tasks shown in Table 8 on page 87. The list of tasks in the table does not represent an exhaustive survey of maintenance steps necessary to verify safe operation of the equipment.

Accumulation of dust and foreign materials such as coal dust, cement dust, or lamp black must be removed from the controller and all surfaces must be wiped clean at regular intervals. Dust can collect moisture, causing voltage breakdown. Do not use compressed air as it will only redistribute contaminants on other surfaces.

Table 8: Maintenance tasks

Maintenance tasks
1. Before any maintenance work is performed within primary compartments, make certain that the equipment is completely de-energized, tested, grounded, tagged or locked out and released for work in an authorized manner.
2. Before starting work on the controller, the following should be completed on any equipment that will affect the area of the work: A. Disable remote control scheme. B. De-energize all direct and backfeed power and control sources, test and ground. C. Disconnect all voltage and control power transformers. D. Open all disconnects.
3. Include the following items in your inspection procedure: A. Check general condition of controller installation. B. Inspect controller interior for accumulation of dust, dirt or any foreign matter. C. Clean any air filters by washing in any mild household detergent. D. Examine indicating lamps and replace as required. E. Check terminal block contacts for loose connections. F. Check instrument and control switches and inspect their contacts. G. Check for proper condition of instrument transformers. Replace burned out fuses, if any. Check primary and secondary connections. H. Remove dust from all insulators and insulation. I. Inspect bus bars and connections for proper condition. If bus bars or connections are overheating check for poor or loose connections or for overload. J. Examine shutters and isolating switch for proper operation. K. Examine all safety interlocks. L. Check gaskets on latching doors and/or door frames. M. Perform maintenance of contactors. N. Check space heaters and thermostat (if equipped) for proper operation. O. Maintain other equipment in accordance with the respective instruction manual requirements. P. Lubricate mechanisms, contacts and other moving components. Q. Replace, reassemble, re-insulate and return all items to proper operating conditions and remove grounds prior to energization.

Particular applications may require further procedures. Should further information be desired or should particular problems arise not covered sufficiently for the purchaser's purposes, the matter should be referred to Siemens at +1 (800) 333-7421 or +1 (423) 262-5700 outside the U.S.

Lubrication
Lubricate stationary silver-surfaced contacts with electrical contact lubricant Siemens part no. 15-172-791-233 prior to use, as follows:

1. Wipe contacts clean.
2. Apply lubricant to contact surfaces
3. Wipe off excess lubricant, leaving a film. Avoid getting lubricant on insulation.

Cleaning insulation
Most of the plastics and synthetics used in insulation systems are attacked by solvents containing aromatics or halogenated hydrocarbons. The use of these may cause crazing and deformation of the material reducing the dielectric strength. Isopropyl alcohol is the only recommended solvent cleaner.

For cleaning the insulating structures of the Siemens type 12SVC400 and 12SVC800 contactors, a clean dry cloth is recommended.

Corrosive atmospheres
SIMOVAC controllers are designed to give top performance when installed in normal indoor locations. Where abnormal conditions, such as corrosive atmospheres, are encountered, special precautions must be taken to minimize their effect. Exposed metallic surfaces, non-insulated bus bars, disconnect switches, primary and secondary disconnecting contacts, wire ends, instrument terminals, etc. must all be protected.

At each maintenance inspection, all of the old grease should be wiped off of the contacts and new lubricant applied to all sliding surfaces. Apply the contact lubricant in a layer .03-.06” (1-2 mm) thick.

Use only Siemens electrical contact lubricant, part no. 15-172-791-233, available in 8 oz. (.23 kg) cans. Other exposed components can be protected with a coat of glyptol or other corrosion resistant coating. When old grease becomes dirty, wipe the part clean and apply new grease immediately.

For type 12SVC400 contactors with optional mechanical latch, relubrication of the latch interfaces is recommended at intervals of not more than three years. Molykote® G-n metal-assembly paste or spray lubricant is recommended. Molykote is a registered trademark of Dow Corning Corp.

Protective relays and instruments
To insure satisfactory operation of protective relays and instruments, do not leave device covers off longer than necessary. When a cover has been broken, cover the device temporarily and replace broken glass as soon as possible.

Equipment surfaces
Inspect the painted surfaces and touch up scratches as necessary. Touch up paint is available from Siemens. This paint matches the unit and is thinned and ready for use in one pint (473 ml³) spray cans.

Mechanical and electrical operation of the controller

1. Carefully inspect the doors, enclosure sides and dead front surfaces over all units for excessive heat. As a general rule, temperature which the palm of the hand cannot stand for about three seconds may indicate trouble. Infrared heat detectors are available for the purpose of detecting heat problems.
2. Inspect the controller a minimum of once each year, or more often as deemed necessary. Look for any moisture or signs of previous wetness or dripping inside the controller. Condensation in conduits or dripping from an outside source is a common cause of failure.
   A. Seal off any conduits that have dripped condensate, and provide an alternative means for the conduit to drain.
   A. Seal off any cracks or openings which have allowed moisture to enter the enclosure. Eliminate the source of any dripping on the enclosure and any other source of moisture.
   C. Replace and thoroughly dry and clean any insulating material which is damp or wet or shows any accumulation of deposited material from previous wetting. Conduct an electrical insulation resistance test as detailed in Pre-energization inspection on page 65 in this instruction manual, to verify the dielectric integrity of the affected insulation.
3. Check all devices for missing or broken parts, proper spring tension, free movement, rusting or corrosion, dirt and excessive wear.
4. Examine all readily accessible insulating parts for cracks or breakage and for arc splatter, sooty deposits, or oil. Clean off arc splatter, oil and sooty deposits, replace if any signs of burning, charring or carbon tracking are found. Make sure that the dielectric integrity of the affected parts is maintained.
5. With the contactor closed measure the resistance across each contactor pole from the line to the load terminal of the contactor. The vacuum interrupters should be at room temperature. A micro-ohm meter injecting at least 30 A should be used. If the resistance exceeds 275 micro-ohms for 12SVC400 contactors or 175 micro-ohms for 12SVC800 contactors, contact Siemens customer service, at +1 (800) 333-7421 or +1 (423) 262-5700 outside the U.S.

⚠ CAUTION

Excessive test voltages.

May result in damage to equipment.

Do not perform dielectric tests at test voltages exceeding the ratings of the tested equipment.

⚠ CAUTION

Excessive test voltages.

May result in damage to equipment.

Do not perform dielectric tests at test voltages exceeding the ratings of the tested equipment.

Vacuum contactor high-potential test

⚠ DANGER

High-potential tests employ hazardous voltages.

Will cause death or serious injury.

Follow safe procedures. Exclude necessary personnel. Use safety barriers. Keep away from equipment during application of test voltages. Dielectric testing should only be conducted by qualified personnel. Refer to dielectric test equipment instructions for safety instructions.

⚠ WARNING

Vacuum interrupters may emit X-ray radiation.

Will cause death or serious injury.

X-rays can be produced when a high voltage is placed across the open contacts of a vacuum interrupter.

Keep personnel at least three feet from any vacuum interrupter during dielectric tests.

The high-potential test should be performed using a 50/60 Hz test set, where the voltage is continuously variable up to at least 30 kV rms. X-radiation at this level is negligible; however, personnel should not be closer than three feet to the vacuum interrupter under test to avoid high-voltage shock hazards. The contactor should be free of dust and other contaminants before conducting this test.

Note: Do not use dc high-potential testers incorporating half-wave rectification. These devices produce high-peak voltages.

These high voltages will produce x-ray radiation. These devices also show erroneous readings of leakage current when testing vacuum interrupters.

1. Remove the 12SVC400 contactor from the enclosure (or disconnect the 12SVC800 contactor line- and load-side connections).
2. Connect output leads of test set across the interrupter terminals of one phase of the contactor with the contactor in the OPEN position.
3. Slowly raise the voltage from zero to the test voltage appropriate for the contactor rating label as shown in Table 9 on page 91 and hold for 15 seconds. The leakage current should not exceed 5 mA during the test.

Note: During voltage ramping, any discharge or test tripping should be ignored unless it becomes impossible to reach the specified test voltage.

4. Reverse the test set leads on the interrupter terminals and repeat the test.
5. Repeat steps 1 through 4 on the remaining interrupters.

If any interrupter fails the test, the vacuum interrupter (on 12SVC800 contactors) or pole assembly (on 12SVC400 contactors) should be replaced.

Table 9: Dielectric test voltages

Rating kV	Test voltage kV	
	Contactor closed	Contactor open
2.5	5.0	10.0
5.0	10.0	10.0
7.2	14.4	10.0

Vacuum contactor main contact wear (type 12SVC400 contactors)

The 12SVC400 contactor is equipped with a combined contact wear and ON/OFF indicator located on the front of the contactor. The stroke of the contactor is indicated by a narrow green bar visible in the lens that expands as the contactor closes from the OFF to its fully closed position or ON position.

With the contactor open, check the amount of main contact wear by connecting continuity leads to line and load terminals of phase 1 of the contactor. With the contactor de-energized use a 1/4" Allen key on the end of the main shaft to close the contactor until continuity is made. If the green bar is in the red zone on the ON/OFF indicator when continuity is first made, the allowable contact wear has been exceeded, and the pole assembly must be replaced (refer to Figure 61).

Figure 61A shows the contact wear indicator in normal condition when continuity on a pole is first made, and indicates that contact wear is satisfactory.

Figure 61B shows the contact wear indicator, when continuity on a pole is first made, that indicates that the pole assembly needs to be replaced as a contact wear has exceeded acceptable limits. The red indicator bar is at the green bar and the vacuum interrupter is no longer usable.

Repeat this process on phases 2 and 3 to complete the check of contact wear.

Vacuum contactor main contact wear (type 12SVC800 contactors)

With the contactor fully closed, the amount of main contact wear can be checked by measuring the gap between the lever and the washer (dimension "1") as shown in Figure 62.

With the contactor closed, it should be possible to insert a 1 mm thick shim in the gap between the washer and the protrusions on the bottom of the lever. When a 1 mm thick shim can no longer be inserted in the gap, the allowable contact wear has been exceeded and the interrupter must be replaced.

Figure 61: Type 12SVC400 (400 A) contactor ON/OFF and contact wear indicator

Figure 62: Type 12SVC800 (720 A) contactor - contactor wear check

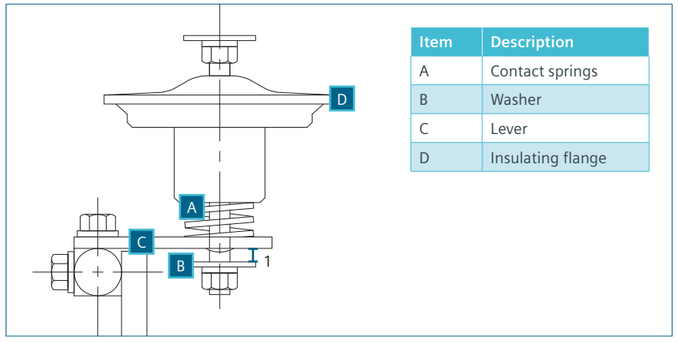

Item	Description
A	Contact springs
B	Washer
C	Lever
D	Insulating flange

Figure 63: Type 12SVC400 (400 A) contactor - control module removal

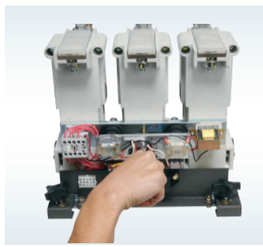

Figure 64: Type 12SVC400 (400 A) contactor - control module removal

Figure 65: Type 12SVC400 (400 A) contactor - control module removal

Figure 67: Type 12SVC400 (400 A) contactor - disconnecting pole assembly

Vacuum contactor control module replacement (type 12SVC400 contactors)
The control module is a removable assembly containing all control components (i.e., coils, rectifier, MOV, economizing circuit, auxiliary switches, terminal board and auxiliary relay with isolated contacts for purchaser's use). The modular concept allows for the control circuit module to be easily removed and quick replacement of a spare module.

To remove the control module, remove the two cover screws using a flat head screwdriver as shown in Figure 63.

The control module can now be removed from the body of the contactor by pulling it forward while lifting it slightly as shown in Figure 64. It must be lifted to disengage the plungers on the main shaft located between the phases from the brass sleeves on the control modules.

To install the replacement, reverse these steps.

Vacuum contactor pole assembly replacement (type 12SVC400 contactors)
To replace the pole assembly, dismantle the contactor by first removing the insulation boot and disconnecting the line and load side connections from the pole assembly to be replaced (refer to Figure 66).

Next, the control module must be removed. To remove the control module, remove the two cover screws using a flat-head screwdriver as shown in Figure 63.

Next, using 7/16" nut driver or socket and ratchet wrench, remove the control module mounting screw as shown in Figure 64.

The control module can now be removed from the body of the contactor by pulling it forward while lifting it slightly as shown. It must be lifted to disengage the plungers on the main shaft located between the phases from the brass sleeves on the control modules as shown in Figure 65.

Next, using a 1/8" Allen key or driver, remove the two countersunk screws that secure the pole assembly to the actuation plate as shown in Figure 67.

Figure 66: Type 12SVC400 (400 A) contactors (plug-in shown)

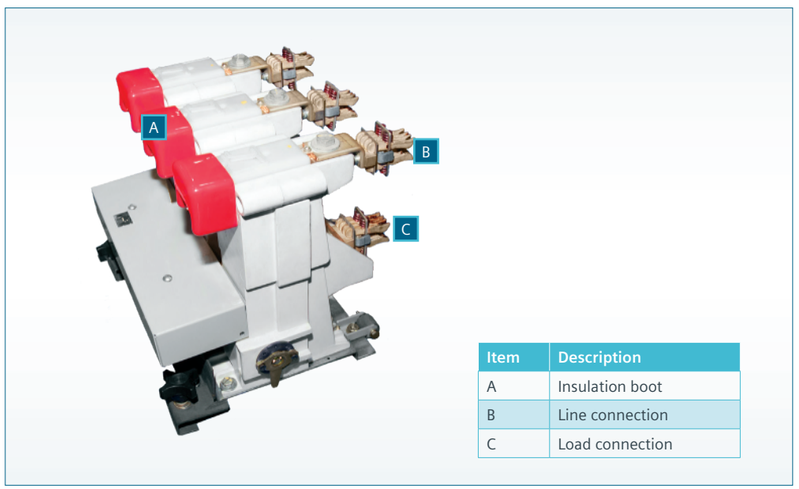

Item	Description
A	Insulation boot
B	Line connection
C	Load connection

To disconnect the pole assembly from the base plate, use a 1/2" socket and ratchet wrench to remove the four mounting screws as shown in Figure 68.

The pole assembly can now be lifted off of the base plate and slid off of the main shaft as shown in Figure 69.

To remove the center pole assembly, at least one actuating plunger must be disassembled to allow the pole assembly to slide off of the main shaft. The plunger can be disassembled by removing the cotter pin shown in Figure 70.

To assemble the contactor, reverse the steps, reusing the existing hardware using the torques in Table 11 on page 103.

Note: Use a new cotter pin (if replacing the center pole assembly) – do not reuse the existing cotter pin.

Vacuum contactor interrupter replacement (type 12SVC-800 contactor)
Contact your Siemens representative if vacuum interrupters need to be replaced.

Isolating switch and handle mechanism check

Figure 68: Type 12SVC400 (400 A) contactor - unbolting pole assembly from base

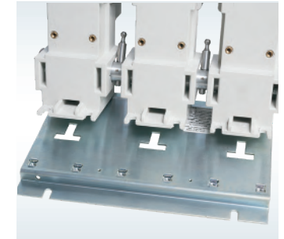

Figure 69: Type 12SVC400 (400 A) contactor - removing pole assembly from base

Figure 70: Type 12SVC400 (400 A) contactor - cotter pin removal

DANGER

Hazardous voltages.

Will cause death, serious injury or property damage.

Disconnect, lockout and ground incoming power and control voltage sources before beginning work on this or any other electrical equipment.

Inspect the isolating switch blades and stab wear each year or after 1,000 operations, whichever comes first. Clean any dirty surfaces and lubricate the silver-surfaced contact areas with electrical contact lubricant (Siemens part no. 15-172-791-233) prior to use, as follows:

1. Wipe contacts clean.
2. Apply lubricant to contact surfaces
3. Wipe off excess lubricant, leaving a film. Avoid getting lubricant on insulation.

Note: Never use organic grease or any other type of electrical or industrial lubricant.

Figure 71: Isolating switch handle relationships

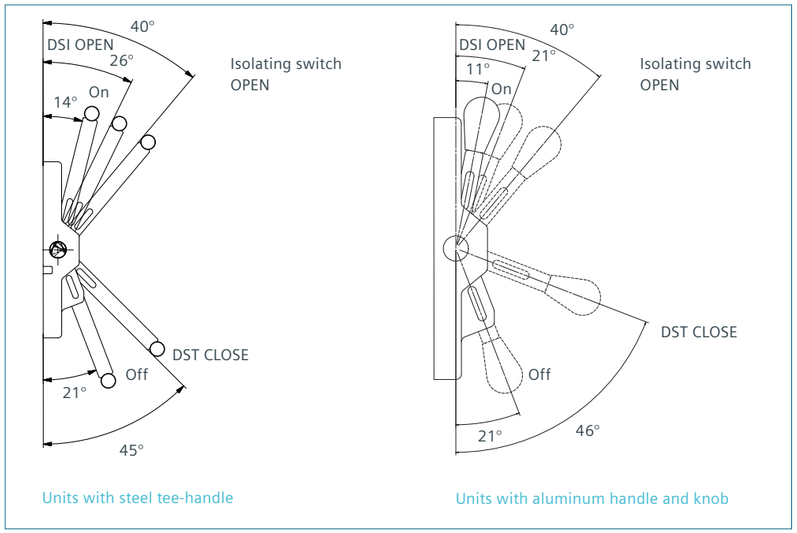

DANGER

Hazardous voltages.

Will cause death, serious injury or property damage.

Disconnect, lockout and ground incoming power and control voltage sources before beginning work on this or any other electrical equipment.

The isolating switch handle mechanism is designed for smooth and easy operation. The mechanism is factory adjusted and with normal use, no maintenance is required, except for a light coat of grease (Siemens part no. 15-172-879-201) at the moving joints. When properly adjusted, the isolating switch will provide the correct closing and opening of the isolating switch and the auxiliary switches.

In order to check for proper operation of the isolating switch and the auxiliary switches, the following procedure is recommended:

1. Disconnect, ground and lockout all incoming power to the controller and open the high-voltage compartment door.
2. Defeat the door interlocks, as described in the Medium-voltage compartment door interlock section of this instruction manual on page 84.
3. Close the isolating switch by moving the handle to the ON position. The shutter should move smoothly to the left as the switch is operated, exposing the line side finger assembly. Continuity should be indicated on the N.O. DSI auxiliary switch contacts.
4. Slowly open the isolating switch by moving the handle toward the OFF position until the DSI auxiliary switch opens as indicated by the ohmmeter. The handle position should be as shown in Figure 71. Continue moving the handle toward the OFF position and observe when the point at which the switch blades disengage from the stab terminals. This should occur at the approximate angle shown.
5. If the DSI auxiliary switch does not open at the specified handle position, it can be adjusted.

DANGER

Hazardous voltages.

Will cause death, serious injury or property damage.

Disconnect, lockout and ground incoming power and control voltage sources before performing any maintenance or inspection of the switch handle mechanism.

To adjust the rod length:

1. Disconnect, ground and lockout all incoming power to the controller and open the high-voltage compartment door.
2. Defeat the door interlocks, as described in Medium-voltage compartment door interlock section of this instruction manual on page 84 and move the handle to the ON position.
3. When the switch is properly adjusted, there should be no gap between the slider and the front housing stops as shown in Figure 72. With the handle in the ON position, loosen the lock nuts on each end of the connecting rod and adjust the length of the rod by rotating it until there is no longer gap between the slider and the front housing stops as shown in Figure 72.
4. Retighten the lock nuts.
5. Repeat steps 1 – 4 to verify any adjustments that were made.

In addition to the functional check, a complete visual inspection of the entire isolating switch mechanism, auxiliary switches and isolating switch should be performed. With the isolating switch in the OFF position, visually inspect the shutter, stationary terminals, slider, blades, flexible shunts and actuating gear. If any parts are broken, worn or show evidence of overheating contact your Siemens representative.

Figure 72: Isolating switch - connecting rod adjustment for correct DSI switch operation

Mechanical interlocks

⚠ WARNING

Hazardous voltages.

Can cause death, serious injury or property damage.

Do not attempt to use excessive force or leverage to defeat the mechanical interlocking system and gain access to the high-voltage compartment.

Interlocks are designed to help prevent possible personal injury or equipment damage resulting from accidental or intentional misuse of equipment. Never attempt to operate this equipment unless all interlocks are installed and operating properly.

⚠ DANGER

Hazardous voltages.

Will cause death, serious injury or property damage.

Do not perform the check of interlock function unless all incoming power is disconnected, grounded and locked out.

All mechanical interlocks are factory adjusted for smooth and positive operation. With normal use, no maintenance should be required except for a light coat of lubricant at the moving joints.

In order to verify proper operation and functionality, portions of the interlock mechanism will have to be defeated to ensure other portions are operating properly.

With the isolating switch in the OFF position and the contactor de-energized, open the controller door and visually inspect all the components of the assembly (see Figure 73 on page 97). Look for signs of worn plating, deformation and or over-stressed components. Contact your Siemens representative for replacements.

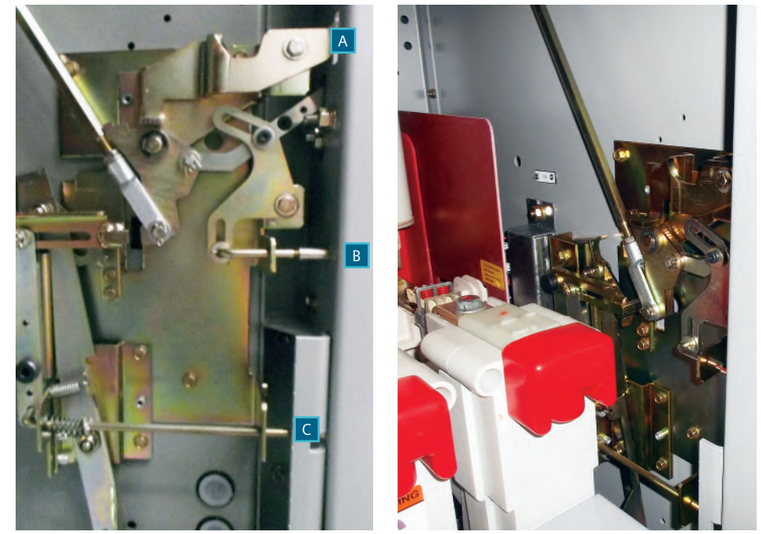

Item	Description
A	Upper interlock lever
B	Center door interlock pin
C	Lower door interlock rod

Figure 73: Mechanical door interlock checks on contactor compartments

Defeat the mechanism by pressing the lower door interlock rod inward while simultaneously pressing the upper interlock lever downward to simulate a closed and latched door. Verify that the center door interlock pin protrudes through the front frame as the handle is operated towards the ON position. While continuing to hold both interlocks, operate the handle from the ON to the OFF position and back several times using a smooth motion and observe the operation of the mechanism. Note if there are any points during the travel that the mechanism binds or sticks, apply lubricant to the joints at that location.

With the handle in the OFF position, release the interlocks and attempt to operate the handle. Next, defeat the upper door interlock lever and attempt to operate the handle. Then, release the upper door interlock lever and defeat the lower door interlock rod and attempt to operate the handle. The handle should not operate under any of these circumstances and excessive deformation of parts should not be observed.

Finally, operate the handle to the ON position and energize the contactor. The handle should not be able to move toward the OFF position and excessive deformation of parts should not be observed.

If this is not the case, contact your Siemens representative.

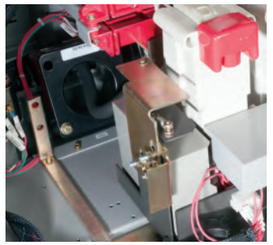

Figure 74: Latch mechanism cover removal - type 12SVC400 latched contactors

Figure 75: Latch mechanism - shown in unlatched position - type 12SVC400 latched contactors

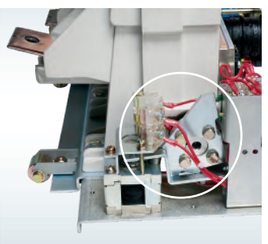

Figure 76: Latch mechanism - shown in latched position - type 12SVC400 latched contactors

Latch mechanism (optional) check (type 12SVC400 contactors)

DANGER

Hazardous voltages.

Will cause death, serious injury or property damage.

Do not perform the check of latch mechanism unless all incoming power is disconnected, grounded and locked out.

To check that the holding latch reliably engages, refer to Figures 74 – 77 and the following instructions.

First remove the cover from the contactor by removing the three mounting screws. With the contactor de-energized use a 1/4" Allen key on the end of the main shaft to manually close the contactor. Observe the motion of the latch cam attached to the main shaft as it engages the stationary block plate. If any parts are broken, worn or show evidence of overheating contact your Siemens representative. To release the mechanism, depress the armature of the trip coil (which presses down on the release lever) and verify that the latch disengages smoothly.

As a final check, apply control power at the test terminals, close the contactor and verify that the contactor latches in the closed position. Then, actuate the electrical open control and verify that the trip coil unlatches the contactor and the contactor opens.

After completion of these checks on the 12SVC400 contactor mechanical latch, lubricate the latch interfaces using Molykote® G-n metal-assembly paste or spray lubricant.

Replenishment of the latch lubricant is recommended at intervals of not more than three years.

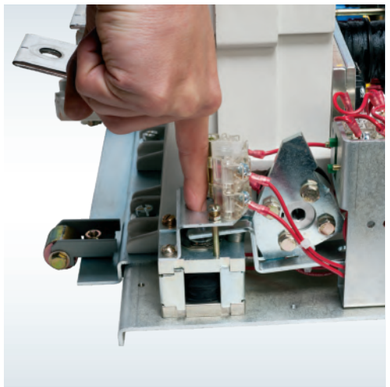

Figure 77: Latch mechanism - depressing trip coil armature to release - type 12SVC400

Optional latch mechanism check (type 12SVC800 contactors)

To check that the holding latch reliably engages, refer to Figure 78.

Check that the holding latch reliably engages. To manually close the contactor, hold the central area of the rotating shaft with a wrench and operate. Check the condition of the latch roller. It should be smooth. Lubricate the rotating parts with a molybdenum disulfide grease or gear lubricant.

As a final check, apply control power at the test terminals, close the contactor and verify that the contactor latches in the closed position. Then, actuate the electrical open control and verify that the trip coil unlatches the contactor and the contactor opens.

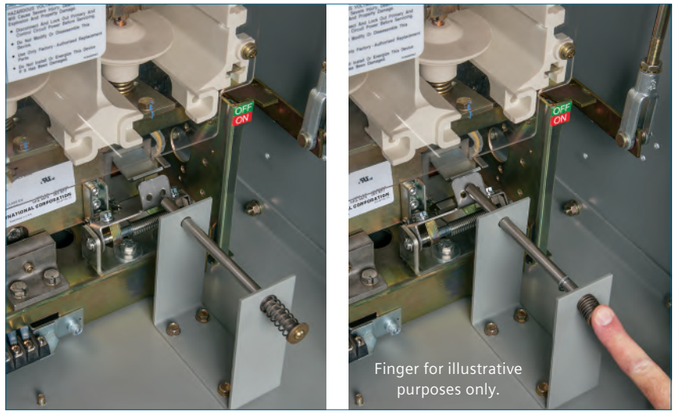

Figure 78: Latch mechanism - depressing trip coil armature to release - type 12SVC800

Auxiliary switch check (type 12SVC800 contactors)

Measure the plunger extension of the auxiliary switch assembly on the contactor with the contactor closed. If the dimension is not as shown in Figure 79, adjust by loosening the auxiliary switch mounting plate, moving the plate so the proper adjustment is achieved, and then retightening the mounting hardware.

After the hardware is tightened, recheck the plunger extension and open the contactor. Next, operate the contactor from OPEN to CLOSED 10 times to verify proper operation. Check for excessive accumulation of dirt or other contaminants in the auxiliary contact block and clean if necessary. Verify that there is remaining wipe of the auxiliary contacts. Check for burned or worn contacts, and replace the auxiliary switch if damage is observed. Reference values for auxiliary switch contact gap and wipe are in Table 10.

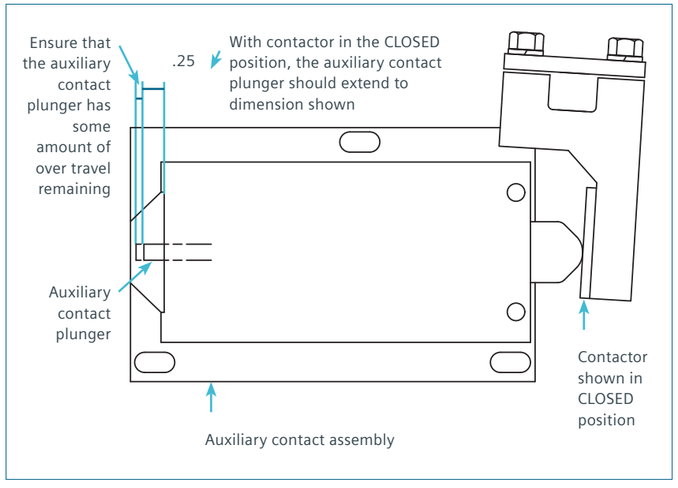

Figure 79: Measurement of auxiliary switch overtravel - type 12SVC800 (720 A) contactor

Table 10: Auxiliary switch contact gap and wipe - type 12SVC800 contactor

Auxiliary switch	Contact gap	Wipe
N.O. contact	3.6-4.4 mm	2.7-3.3 mm
N.C. contact	3.6-4.4 mm	2.7-3.3 mm
Delayed N.C. contact (for latched contactor only contacts 16-26)	2.2-2.8 mm	4.0-5.0 mm

Pickup voltage check
Check to see that the SIMOVAC contactors will pickup at 85 percent of rated voltage. Watch that the contactor picks up in a single motion rather than a two-step motion.

If the pickup voltage necessary is too high, it is possible that the vacuum interrupters may be sticking slightly. In this event, put a small amount of lubricating oil on the moving rod on the lower end of the type 12SVC800 contactor and the main shaft of the type 12SVC400 contactor.

Electrical interlocks
Inspect the mechanical and electrical integrity of the DSI and DST auxiliary switches.

To verify proper operation of the DSI and DST auxiliary switches, refer to the procedure in the isolating switch and handle mechanism check on page 105 of this instruction manual.

To adjust DSI the switch, loosen the two mounting screws and rotate the micro-switch so that it operates at the specified angular dimension.

To adjust the DST switch, loosen the two mounting screws and rotate the micro-switch so that it operates when the handle is in the OFF position and the lever releases when the handle moves from the OFF position.

Note: Do not bend the switch levers.

Electrical joints and terminals

DANGER

Hazardous voltages.

Will cause death, serious injury or property damage.

Disconnect, lockout, and ground incoming power and control voltage sources before beginning work on this or any other electrical equipment.

Carefully inspect all visible accessible electrical joints and terminals in the bus and wiring system.

1. Retighten bolts and nuts at the bus joints if there is any sign of overheating or looseness. Refer to Table 12 on page 106.
2. If joints or terminations appear to be badly discolored, corroded or pitted, or show evidence of having been subjected to high temperature, the parts should be disassembled and cleaned or replaced.

3. Examine all wire or cable connections for evidence of looseness or overheating. Retighten, if necessary. If major discoloration of cable insulation or if cable damage is apparent, replace the damaged portion of the cable.
4. Closely examine fuse clips. If there is any sign of overheating or looseness, check the spring pressure, tightness of clamps, etc. Replace the fuse clips if the spring pressure compares unfavorably with that of other similar fuse clips in the controller. Make sure that fuses are completely inserted.
5. Examine all joints for plating wear, replace if the plating is worn out. Special attention should be paid to the stab fingers under such adverse environmental conditions where sulfur dioxide, chlorine, some hydrocarbons and salt water exists in the atmosphere. Replace if evidence of copper oxide or other films have formed. Use Siemens contact lubricant number 15-172-791-233 to protect the stab finger joint from deterioration. Worn plating on the stabs can result in overheating and may lead to flashover. Plating wear-through can be expected after approximately 1,500 operations.
6. Examine insulation on conductors for signs of overheating or chafing against metal edges that could progress into an insulation failure. Replace any damaged conductors, and ensure replacement conductors are braced or shielded if needed to avoid similar damage in future operations.

DANGER

The use of unauthorized parts in the repair of the equipment or tampering by unqualified personnel will result in dangerous conditions that will cause death, serious injury or equipment damage.

Follow all safety instructions contained herein.

DANGER

Hazardous voltages.

Will cause death, serious injury or property damage.

Disconnect, ground and lockout incoming power before performing any maintenance or inspection of the switch handle mechanism.

DANGER

Hazardous voltages.

Will cause death, serious injury or property damage.

Do not attempt to open high-voltage door if the switch blades are in the closed (ON) position.

DANGER

Hazardous voltages.

Will cause death, serious injury or property damage.

The door-handle interlock should be defeated only by authorized and qualified personnel in the event of a malfunction in the switch handle mechanism and/or interlock system.

Never defeat this interlock if the switch blades are in the closed position (ON) unless all incoming power is disconnected, grounded and locked out.

7. Be sure that any conditions that caused overheating have been corrected.

Overload relay checks
Consult relay instruction manual for the specific device for periodic checks and tests.

Load-interrupter switch maintenance and adjustment

Thorough inspection at periodic intervals is important to satisfactory operation of the load interrupter switch. Conditions affecting maintenance are operating environment, experience of operating personnel, equipment loading and any special operational requirements.

It is recommended that the following inspections be performed on the load interrupter switch at least once per year or after 100 operations of a 600 A switch or 20 operations of a 1,200 A switch. More frequent inspections may be necessary if local conditions require (refer to Figure 80).

1. Perform a visual inspection of all surfaces including insulators, operating arms, mechanisms, pushrods, etc. for dust and dirt accumulation. Remove any such dirt and dust by wiping surfaces with a clean cloth.
2. Inspect the bus bars and cable connections to see that they are in proper condition. If they show signs of having overheated, check for loose connections and re-tighten as required referring to Table 11 on page 103.
3. Check the condition of the main contacts, quick-break blades and arc chutes. Replace any worn or damaged parts.

Figure 80: Load-interrupter switch components

Item	Description
A	Arc chute
B	Stationary contact
C	Insulator
D	Stationary main contact
E	Quick-acting blade
F	Main switch blade
G	Hinge contact
H	Operating handle
I	Position indicators
J	Release knob

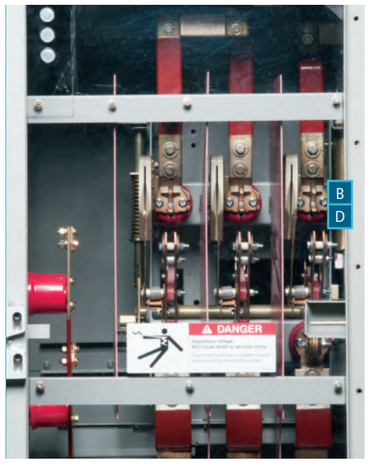

4. Check to determine that the blades make good contact. A contact resistance measurement between jaw spade terminal and hinge spade terminals should be taken and should be between 35 to 100 micro-ohms. These contacts do not tarnish like copper, but they should be wiped clean occasionally, especially if the switch has not been operated for some time. This can be done by opening and closing the switch several times in succession.

DO NOT ATTEMPT TO GRIND THE BLADES WITH POWDERED EMERY OR OTHER ABRASIVES. This will inevitably result in poor contact and overheating.

5. Examine all insulation carefully for signs of tracking. Special attention must be given to areas where the conductor passes through an insulator or lays near a barrier. Examine the surface for cracks or streaked discoloration. When tracking is found, the insulation involved must be replaced.
6. Check that the front and rear latches of the operating mechanism, which are spring operated, rotate freely up and down by using finger pressure on the rollers.
7. Apply high-temperature lubricant (silicone or molybdenum based) to contact component surfaces subject to abrasion. Hydrocarbon-based grease may be applied, very sparingly to bearings, linkages, sprockets and drive chains not directly associated with the current carrying components.

Recommended fastener torque values

When making bolted connections, the following considerations should be generally followed. The recommended torque is determined by the size and type of hardware used. Refer to Table 11.

1. Metal-to-metal – Apply standard torque as listed.
2. Metal-to-insert molded in compound part – Apply approximately $^{2}/_{3}$ of standard torque listed.
3. Compound-to-insert molded in compound part – Apply approximately $^{1}/_{2}$ of standard torque listed.
4. Compound-to-compound – Apply approximately $^{1}/_{2}$ of standard torque listed.

Thread size	Standard torque metal-to-metal (in lbs/N·m)[1]	$^{2}/_{3}$ standard torque metal-to-insert (in lbs/N·m)	$^{1}/_{2}$ standard torque compound-to-insert (in lbs/N·m)	$^{1}/_{2}$ standard torque compound-to-compound (in lbs/N·m)
8-32	14-20/1.6-2.3	10-14/1.0-1.6	7-10/0.8-1.2	7-10/0.8-1.2
10-32	20-30/2.3-3.4	13-20/1.6-2.3	10-15/1.2-1.8	10-15/1.2-1.8
$^{1}/_{4}$-20	40-60/4.5-6.8	26-40/3.2-4.5	20-30/2.3-3.4	20-30/2.3-3.4
$^{5}/_{16}$-18	168-228/19-25.8	110-150/12.4-17	84-114/9.5-13	84-114/9.5-13
$^{3}/_{8}$-16	240-360/27-41[1]	160-240/18-27	120-180/13.5-20.5	120-180/13.5-20.5
$^{1}/_{2}$-13	480-600/54-68[1]	320-400/36-45	240-300/27-34	240-300/27-34

Table 11: Recommended torque values

Footnote:

1. 3/8-16 and 1/2-13: for bus connections, refer to Torque requirements for bus joints - main bus and ground bus on page 59.

Maintenance after a fault has occurred (non-internal arcing faults only)

DANGER

Hazardous voltages.

Will cause death, serious injury or property damage.

Disconnect, lockout, and ground incoming power and control voltage sources before beginning work on this or any other electrical equipment.

Only qualified personnel should be involved in the inspection and repair procedure and all plant safety procedures must be observed.

Introduction
Before performing any maintenance:

- Test all power terminals to verify that incoming power has been disconnected. Use only approved high-voltage test equipment to check voltage on power terminals.

Do not attempt to measure high voltage (over 600 volts) with a volt-ohm meter.

- Check all control and secondary circuit terminals with a voltmeter to make certain that all sources of incoming control and secondary voltage have been disconnected.
- Connect safety grounds to power terminals after the system has been de-energized, and prior to working on the equipment.
- Perform all disconnecting, grounding, and lockout operations in accordance with established safety procedures.
- Follow the procedure outlined in the Pre-energization inspection on page 65 in this instruction manual before power is restored.

General
The excessive currents occurring during a fault may result in structure, component and/or conductor damage due to mechanical distortion, thermal damage, metal deposits, smoke or any combination thereof. After a fault, repair the cause of the fault; inspect all equipment per NEMA Standards Publication No. ICS-2, Annex A, and make any necessary repairs or replacements prior to placing the equipment into service again. Be sure that all replacements (if any) are of the proper rating and are suitable for the application. If in doubt, contact your Siemens representative.

Inspection of enclosures
Inspect the external surfaces of the enclosure for evidence of deformation or discoloration. Any signs of deformation or discoloration are usually indicative of damage within. Extensive damage will require replacement of enclosure parts and the enclosed equipment. Ensure that door-mounted devices and safety interlocks function properly.

Inspection of terminals and internal conductors
Inspect all electrical terminals and conductors and replace any that show evidence of discoloration, melting, arcing damage and cable or bus insulation damage. Special attention should be paid to the stab (disconnect) fingers of the isolating switches and contactors.

Inspection of overload relays
The complete overload relay must be replaced if burnout of the heater element has occurred. Any indication of an arc striking or burning the overload relay also requires replacement.

If there is no visual indication of damage that would require replacement, contact operation must be verified by electrically or mechanically tripping and resetting the overload relay.

Inspection of fuse holders
Replace fuse holders if the insulation mounts, barriers, or fuse clips show signs of damage, deterioration, heating, distortion or looseness.

Inspection of fuses
Always replace all three fuses in a three phase circuit even though only one or two are open circuited since internal damage suffered by fuses not replaced could result in nuisance shutdown later.

Perform Pre-energization inspection procedures detailed on page 65 in this instruction manual before restoring the equipment to service.

Troubleshooting

In the event that operating problems are encountered, use the following troubleshooting chart Table 12 to isolate the cause of the problem and find the remedy. If the corrective actions given in the chart fail to correct the difficulty, consult your Siemens representative.

The following information is required if it is necessary to contact Siemens relative to the equipment problem.

1. Siemens order number (and part number if available).
2. Nameplate data on contactor or controller.
3. Duty cycle and any details of operation.
4. Length of time in service and approximate total number of operations.
5. Voltage, current and frequency.
6. Description of any problems.
7. Any other pertinent information, such as drawing, layout and schematic number.

Table 12: Troubleshooting

Sub-assembly	Item	Inspect for
Doors will not close or are out of alignment.	• Enclosure is not bolted down tightly on level surface. • Door hinges not properly adjusted.	• Using level, add shims as necessary, and tighten anchoring bolts. • Remove door hinges. Add or substract shims as necessary
Binding of shutter mechanism or mechanical interlocks.	• Warpage or breakage of shutter mechanism or housing components. • Mechanism components are binding. • Rough handling during transportation or installation.	• Replace shutter mechanism of housing components as required to ensure smooth operation. • Refer to maintenance section on page 105 on adjusting shutter and interlock mechanism. • Adjust mechanism and replace broken parts.
Contactor will not close.	• Control circuit or main fuse blown. • Incoming power line not energized. • Isolating switch interlock (DSI) auxiliary switch is not adjusted properly. • Main contactor coil. • Master relay (MR) defective. • Control power transformer defective. • Overload relay tripped or defective. • Defective rectifier. • Selector switch (RUN-TEST) is not in proper position. • Missing jumpers, loose connections, remote connections, etc.	• Inspect fuses, replace if blown. • Close feeder circuit breaker or tie switch. • Adjust per instructions in the maintenance section beginning on page 105. • Check magnet operation, replace coil as necessary. • Check and replace if defective. • Check and replace if necessary. • Check and replace if necessary. • Check rectifier and replace if necessary. • Switch should be in the "RUN" position. • Check wiring diagram carefully to make sure that all external or alternate connections have been made satisfactorily. This is especially true where remote protective or control devices are used.

Table 12: Troubleshooting (continued)

Sub-assembly	Item	Inspect for
Contactor chatter.	• Loose connection in control circuit. • Defective master relay. • Defective coil or drive board. • High altitude. • Low-control voltage.	• Tighten connections in control circuit. • Check relay, replace if necessary. • Check main coil and rectifier, replace if necessary. • Consult Siemens. • Check line voltage.
Overload relays trip during starting or soon after motor is up to speed.	• Motor being started too frequently at close intervals. • Motor overloaded. • Excessive motor acceleration time. • Low-line voltage. • Overload relay not adjusted to motor capabilities. • Incorrect relay or relay set incorrectly. • Relays set incorrectly.	• Jogging and starting operations must be limited to capabilities of the motor. Check starting limitations in motor instruction manual before repeated starts. • Limited starting load and running load to motor capabilities. • The starting of high-inertia loads may not permit the use of standard overload relay applications. For accelerating times of 10 seconds or more, special overload relay bypass devices and circuits would usually be required. Contact the factory regarding such problems and supply complete data on locked-rotor starting current and total accelerating time under maximum load conditions. • Line voltage should be maintained between +/- 10 percent of motor nameplate voltage. • Adjust relay setting in accordance with instructions for the overload relay. Adjustment should correspond to thermal rating of the motor, including temperature rise, duty and service factor. • Contact factory. • Set in accordance with relay instructions.
Overload relays fail to trip on overload circuit.	• Incorrect relay or relay set incorrectly. • Relay tripping mechanism jammed. • Current transformers with improper ratio or with short-circuited secondary terminals.	• Check relay selection and adjustment per overload relay instructions. • Replace relay. • Current transformers must have a step-down ratio to correspond to full-load motor current and relay selection. Protective jumpers may be provided at current transformer secondary terminals or on terminal block connections to guard against open transformer secondary circuit, and jumpers must be removed before placing equipment in operation.

Table 12: Troubleshooting (continued)

Sub-assembly	Item	Inspect for
Blowing of motor power fuses.	• Short circuit on the load side of the motor fuses. • Jogging or too frequent starting.	• Use Megger and other test instruments to locate fault and correct. • If one fuse blows, always replace all three fuses. When one fuse blows, there is often internal damage to the unblown fuses. On frequent starting, fuses accumulate abnormal heat and cool more closely follow cooling and heating of motor windings, successive starting operations must be limited to the safe capacity of the motor to prevent fuse blowing from this cause. Check size rating on fuse nameplate against data label in medium-voltage compartment. All three fuses must agree. Fuses are selected on the basis of motor full-load current, locked-rotor current and starting time. Approximate sizes can be determined by referring to Figures 53 on page 89 and 55 on page 91 in this instruction manual. Fuses internally damaged because of improper handling. Motor power fuses are made up of multiple strands of fine metal ribbon, which may be broken if fuses are dropped or roughly handled. Several individual strands can be broken without the trip target indicating a blown fuse. Handle fuses carefully, installing them in clips on the top of the vacuum contactor with the indicator toward the front.
Blowing of primary control transformer fuses.	• Shorted primary winding in control transformer. • Fuse may be “open” due to rough handling before installation. • Secondary fuses not properly coordinated.	• Replace or repair transformer. • Replace fuse. • Melting characteristics of secondary fuse should not intersect melting characteristic of primary fuse. Rating of secondary NEC fuse should not exceed twice the secondary current rating.
Blowing of secondary control transformer fuses.	• Abnormal current or short-circuit in control.	• Check for fault operation of economizing relay, shorted magnet coils, shorted rectifiers, grounds, loose or bent connections, mechanical binding in relay and contactor mechanisms, excessive operations and incorrect secondary terminal connections.

Spare parts

Spare parts
Recommended spare parts are listed in Table 13.

Table 13: Spare parts

Description	Quantity per controller	Part number
Medium-voltage contactor 7.2 kV - 12SVC400		
Phase assembly (half shelf/universal/three required per contactor)	1	FR-500-403-839
Control module 120 Vac with three N.O. and three N.C. auxiliary contacts (non-latched)	1	FR-500-403-840
Control module 240 Vac with three N.O. and three N.C. auxiliary contacts (non-latched)	1	FR-500-403-841
Control module 125 Vdc with three N.O. and three N.C. auxiliary contacts (non-latched)	1	FR-500-403-842
Control module 250 Vdc with three N.O. and three N.C. auxiliary contacts (non-latched)	1	FR-500-403-843
Control module 120 Vac with one N.O. and one N.C. auxiliary contacts (latched, closing)	1	FR-500-403-844
Control module 240 Vac with one N.O. and one N.C. auxiliary contacts (latched, closing)	1	FR-500-403-845
Medium-voltage contactor 7.2 kV - 12SVC800	Consult factory.	Consult factory.
Control module	1	25-154-504-019
Fuses		
CPT primary fuse 0.5E - 5.0 kV	2	25-131-635-005
CPT primary fuse 1E - 5.0 kV	2	25-131-635-004
CPT primary fuse 2E - 5.0 kV	2	25-131-635-001
CPT primary fuse 3E - 5.0 kV	2	25-131-635-002
CPT primary fuse 4E - 5.0 kV	2	25-131-635-003
CPT primary fuse 1E - 7.2 kV	2	25-154-364-001
CPT primary fuse 2E - 7.2 kV	2	25-154-364-002
Control power transformer		
0.75 kVA - 2,300/115 V	1	CPTAFP13474
0.75 kVA - 4,000/115 V	1	CPTAFP13475
0.75 kVA - 6,600/115 V	1	25-213-203-001
2 kVA - 2,300/115 V	1	CPTAFP13478
2 kVA - 4,000/115 V	1	CPTAFP13476
2 kVA - 6,600/115 V	1	25-213-203-005
3 kVA - 2,300/115 V	1	CPTAFP13479
3 kVA - 4,000/115 V	1	CPTAFP13477
3.25 kVA - 6,600/115 V	1	25-213-203-011

Disposal

Siemens equipment is environmentally friendly product predominantly consisting of recyclable materials. For disposal, some disassembly, separation, and professional services handling may be required.

Materials to be handled include but are not limited to:

- Metals: Should be transferred and recycled as mixed scrap metals.
- Plastics: Plastic containing a recycle symbol should be recycled. Plastic lacking the recycle symbol should be discarded as industrial waste.
- Small electronics, insulated cables, and motors: Should be recycled via electronics scrap disposal companies specialized in separating and sorting as described above.
- Batteries: Should be recycled via a recycling company.

Disposal regulations vary from locality to locality and may be modified over time. Specific regulations and guidelines should be verified at the time of waste processing to ensure that current requirements are being fulfilled. For specific assistance in understanding and applying regional regulations and policies or manufacturer's recommendations, refer to the local Siemens service representative for additional information.

⚠ WARNING

Stored energy.

Can cause death, serious injury, or property damage.

Mechanisms contain stored energy, which may be released during disassembly.

Wear suitable protection and take appropriate precautions when disconnecting and removing moving parts.

⚠ WARNING

Heavy objects.

Can cause death or serious injury.

Disassembly may cause an unbalanced load, and could result in falling objects.

Take appropriate precautions in a properly designated workspace to maximize support and stability.

Annex A - SSRV controller

This Annex supplements the SIMOVAC instruction manual and describes the SSRVS controller. Except as discussed with this Annex, other aspects are as in the SIMOVAC controller instruction manual.

General description
The Siemens SIMOVAC solid-state reduced-voltage starter (SSRVS) is an integrated system of contactors and components arranged for convenient access within a common enclosure consisting of one or more free-standing structural sections. SIMOVAC indoor sections are normally 36" (914 mm) wide, 30" (762 mm) deep and 95" (2,413 mm) tall, while SIMOVAC-AR indoor sections are 36" (914 mm) wide, 40" (1,016 mm) deep and 112" (2,845 mm) tall as shown in Figures 4 and 5 on page 9.

Disconnect switch interlock (DSI)
The DSI (disconnect switch interlock) is shown in Figure 52: Disconnect switch interlock (DSI) auxiliary switch and disconnect switch test (DST) auxiliary switch (photo shown with isolating switch open) on page 73. All control power derived from the secondary of the control power transformer is carried from the control power transformer to the low-voltage control panel through a micro-switch mounted on the left side of the isolating switch main shaft. The function of this interlock is to disconnect the load from the CPT secondary prior to disengagement of the main power stabs as the isolating switch is opened. As the isolating switch handle is moved from ON to OFF, the normally closed DSI contact opens and isolates the CPT from the line side circuit.

Disconnect switch test (DST)
The DST is shown in Figure 52: Disconnect switch interlock (DSI) auxiliary switch and disconnect switch test (DST) auxiliary switch (photo shown with isolating switch open) on page 73 and is a micro-switch that is mounted near the DSI switch. The DST is used to prevent operation of the contactor via the test power when the isolating switch is closed (in the ON position). As the isolating switch handle is moved from OFF to ON, the normally closed DST contact opens and isolates the test source from the control circuit.

Main bus
In addition to these compartments, each section (except for single-section assemblies) has a main bus compartment to house the horizontal bus which extends the entire length of the controller. This compartment is located in the upper portion of the section and provides easy access for the horizontal bus to distribute the electrical power within the controller. Each vertical section containing provisions for contactors is fed by a vertical bus system, which is connected to the horizontal bus.

The vertical bus system in turn supplies power through the stab assembly on the isolating switch. The horizontal and vertical bus system is isolated from the front by means of barriers.

In single-section controllers, having no main horizontal bus, the incoming connections can be located in the normal main bus area at the top of the section.

Ratings
The SIMOVAC SSRVS is rated in accordance with Table 2: Controller Assembly ratings on page 13) and as shown on the nameplate on the front of the enclosure.

SIMOVAC SSRVS controllers use both the type 12SVC400 (400 A) and type 12SVC800 (720 A) contactors in combination with primary current-limiting fuses for overload and short-circuit protection. SSRVS controller dimensions are as shown in Table 14 on page 111.

Table 14: SSRVS controller dimensions

Horse-power	Ampere rating A	Interrupt-ing kA	Dimensions in inches (mm)[7, 9]			Weight in lbs (kg)[3, 8]	Lay-out
			Height[1, 10]	Width	Depth[2]		
2.3 kV to 2.4 kV							
600	155	63	95 (2,413)	36 (914)	30 (762)	1,833 (832)[4]	1
1,200	288	63	95 (2,413)	36 (914)	30 (762)	1,833 (832)[4]	1
1,500	400	50	95 (2,413)	36 (914)	30 (762)	1,833 (832)[4]	1
2,750	600	63	95 (2,413)	84 (2,134)	30 (762)	3,453 (1,566)[6]	3
3,000	720	50	95 (2,413)	84 (2,134)	30 (762)	3,453 (1,566)[6]	3
4.0 kV to 4.8 kV							
1,000	155	63	95 (2,413)	36 (914)	30 (762)	1,833 (832)[4]	1
2,250	288	63	95 (2,413)	36 (914)	30 (762)	1,833 (832)[4]	1
3,000	400	63	95 (2,413)	84 (2,134)	30 (762)	3,453 (1,566)[6]	3
4,500	600	63	95 (2,413)	84 (2,134)	30 (762)	3,453 (1,566)[6]	3
5,500	720	50	95 (2,413)	84 (2,134)	30 (762)	3,453 (1,566)[6]	3
6.6 kV to 6.9 kV							
2,000	155	63	95 (2,413)	54 (1,372)	30 (762)	2,488 (1,128)[5]	2
3,500	288	63	95 (2,413)	54 (1,372)	30 (762)	2,488 (1,128)[5]	2
5,000	400	63	95 (2,413)	84 (2,134)	30 (762)	3,453 (1,566)[6]	3
6,750	600	63	95 (2,413)	84 (2,134)	30 (762)	3,453 (1,566)[6]	3

Footnotes:

1. Add 17″ (432 mm) for height of SIMOVAC-AR arc-resistant controller (total 112″ (2,845 mm)).
2. Add 10.5″ (257 mm) for depth of SIMOVAC-AR arc-resistant controller (total 40.5″ (1,029 mm)).
3. Weights are for complete controller in one or two vertical sections.
4. Add 455 lbs (205 kg) for SIMOVAC-AR arc-resistant controller.
5. Add 730 lbs (330 kg) for SIMOVAC-AR arc-resistant controller.
6. Add 1,140 lbs (517 kg) for SIMOVAC-AR arc-resistant controller.
7. Add 6″ (152 mm) width for single-section controller or 12″ (304 mm) for two-section controller for outdoor (non-arc-resistant). Height increases to 107.3″ (2,725 mm) and depth increases to 37.4″ (950 mm).
8. Add 710 lbs (322 kg) for single-section controller (layout 1), 1,420 lbs (644 kg) for two-section controller (layout 2) or 1,750 lbs (794 kg) for two-section controller (layout 3) for outdoor (non-arc-resistant).
9. Maximum shipping group is four vertical sections.
10. For non-arc-resistant structures with 4,000 A main bus, add 7.25″ (184 mm) to the overall height and 75 lbs (35 kg) to the total weight per section.

NOTICE

Do NOT connect power-factor correction capacitors or surge capacitors to the load (motor) circuit of a soft-start controller (SSRVS), either at the controller itself or at the motor-terminal box.

During starting, the load-side capacitors will appear as a short circuit across the silicon-controlled rectifiers (SCR) of the SSRVS, which will cause a high di/dt, and will damage the SCRs.

Capacitors, if used, must be connected to the line side of the SSRVS unit.

Connection of capacitors to the load side of an SSRVS will result in damage to the SCRs, and this damage is not covered by the equipment warranty.

NOTICE

Cables between the soft-start controller (SSRVS) and the load (motor) must be limited to no more than 660 ft (200 m) for one cable per phase, or 330 ft (100 m) for two cables per phase.

Upon startup, the capacitance of the load-side shielded cables appears as a short circuit across the silicon-controlled rectifiers (SCR) of the SSRVS, which will cause a high di/dt, and will damage the SCRs.

Damage to the SCRs resulting from excess load-side cable length is not covered by the equipment warranty.

NOTICE

Do NOT connect surge arresters to the load (motor) circuit of a soft-start controller (SSRVS), either at the controller itself or at the motor terminal box.

Surge arrester operation will impose high di/dt on the SCRs of the SSRVS, and will damage the SCRs. This damage is not covered by the equipment warranty.

Surge arresters, if used, must be connected to the line side of the SSRVS unit.

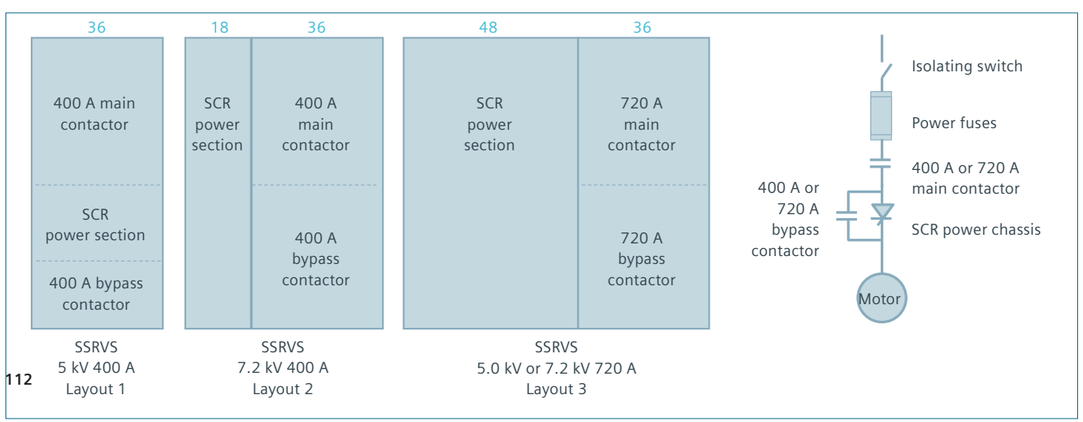

Figure 81: Medium-voltage components identification typical cubicle arrangement

Item	Description
A	Contactor (plug-in shown)
B	Medium-voltage main contactor fuses (quantity of 3)
C	Medium-voltage bypass contactor
D	Silicon-controlled rectifier power stack assembly complete with RC snubbers and firing boards
E	Electronic potential transformer (hidden)
F	Switch power mode supply (hidden)
G	Current transformers
H	Load connections
I	Mechanical and electrical interlocks (not shown)
J	Main horizontal bus (optional)

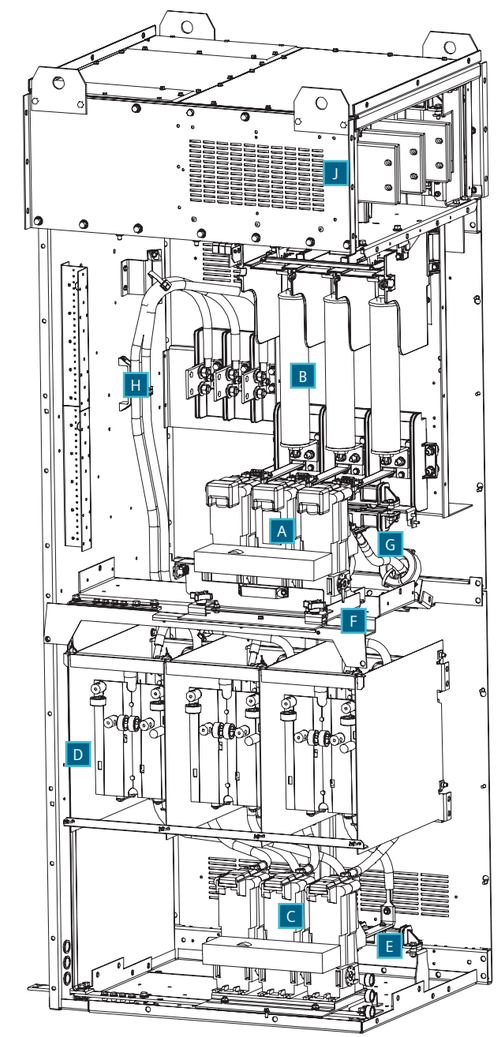

Figure 82: Typical one-line diagram (power and control schemes)

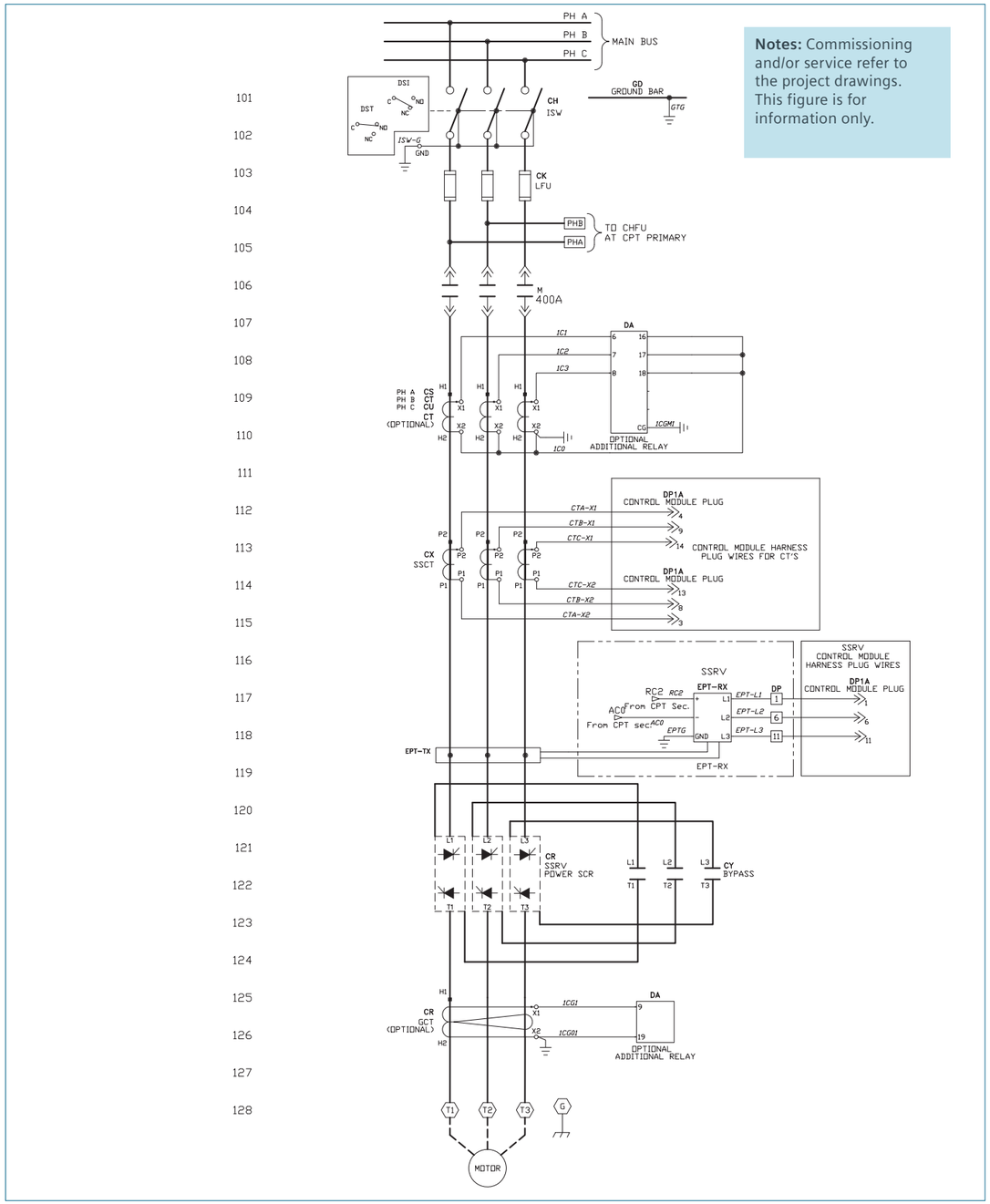

Figure 83: Typical one-line diagram (power and control schemes)

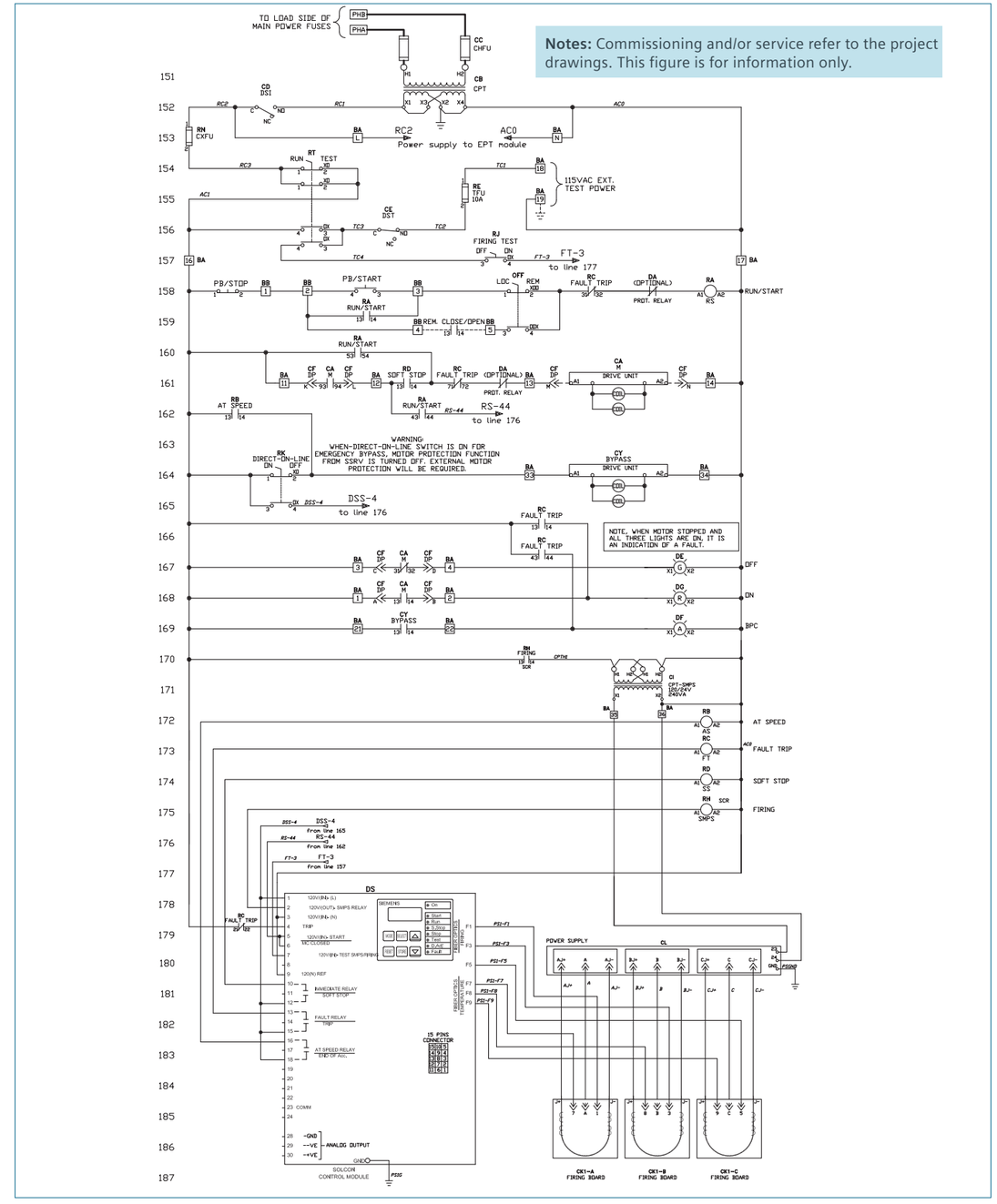

Annex B - RVAT controller

This Annex supplements the SIMOVAC instruction manual and describes the RVAT controller. Except as discussed with this Annex, other aspects are as in the SIMOVAC controller instruction manual.

General description
The Siemens SIMOVAC reduced-voltage, autotransformer (RVAT) is an integrated system of contactors and components arranged for convenient access within a common enclosure consisting of two free-standing structural sections.

SIMOVAC indoor sections are normally 72" (1,828 mm) wide, 30" (762 mm) deep, and 95" (2,413 mm) tall, while SIMOVAC-AR indoor sections are 72" (1,828 mm) wide, 40" (1,016 mm) deep and 112" (2,845 mm) tall as shown in Figures 4 and 5 on page 9.

Main bus
In addition to these compartments, each SIMOVAC section has the option to have a main bus compartment to house the horizontal bus which extends the entire length of the controller. This compartment is in the upper portion of the section and provides easy access for the horizontal bus to distribute the electrical power within the controller. Each vertical section containing provisions for contactors is fed by a vertical bus system, which is connected to the horizontal bus.

For SIMOVAC-AR controller, the main bus compartment is always part of the standard arrangement with or without horizontal bus.

The RVAT starter can be configured into a lineup configuration.

The vertical bus system supplies power through the stab assembly on the isolating switch. The horizontal and vertical bus system is isolated from the front by means of barriers.

In stand-alone controllers having no main horizontal bus, the incoming can be located in the normal main bus area at the top of the section or the lower controller compartment in the right-hand section.

Ratings
The SIMOVAC RVAT controller is rated in accordance with Table 2: Controller Assembly ratings on page 13 and as shown on the nameplate on the front of the enclosure.

SIMOVAC RVAT controllers use both the type 12SVC400 (400 A) and type 12SVC800 (720 A) contactors in combination with primary current-limiting fuses for overload and short-circuit protection. RVAT controller dimensions are as shown in Table 15 on page 116.

Footnotes:
1. Add 17" (432 mm) for height of SIMOVAC-AR arc-resistant controller (total 112" (2,845 mm)).
2. Add 14.73" (376mm) for height of SIMOVAC if bus bar compartment included.
3. Add 10.5" (257 mm) for depth of SIMOVAC-AR arc-resistant controller (total 40.5" (1,029 mm)).
4. Weights are for complete controller in two vertical sections.
5. Add 152 lbs (70 kg) for bus bar compartments.
6. Add 680 lbs (310 kg) for SIMOVAC-AR arc-resistant controller.
7. Add 1,140 lbs (517 kg) for SIMOVAC-AR arc-resistant controller.
8. Add 6" (152 mm) width per section for outdoor (non-arc-resistant) controller. Height increases to 107.3" (2,725 mm) and depth increases to 37.4" (950 mm).
9. Add 1,420 lbs (644 kg) for 400 A controller (layout 1), or 1,900 lbs (862 kg) for 720 A controller (layout 2) for outdoor (non-arc-resistant).
10. Maximum shipping group is two vertical sections.
11. Consult factory for other ratings.
12. For 63 kA interrupting capacity, please consult factory.
13. For non-arc-resistant with 4,000 A main bus, add 7.25" (184 mm) to the overall height and 75 lbs (35 kg) to the total weight per section.

Table 15: RVAT controller dimensions

Maximum LRA[11]	Horsepower[11]	Ampere rating A	Interrupting rating kA[12]	Dimensions in inches (mm)[10]			Weight in lbs (kg)[4, 9]	Layout
				Height[1,2, 13]	Width[8]	Depth[3]		
2.3 kV								
738	500	400	63	80 (2,038)	72 (1,829)	30 (762)	2,899 (1,315)[5,6]	1
1,404	1,000	400	63	80 (2,038)	72 (1,829)	30 (762)	3,085 (1,399)[5,6]	1
2,052	1,500	400	63	80 (2,038)	72 (1,829)	30 (762)	3,278 (1,487)[5,6]	1
2,610	2,000	400	63	80 (2,038)	72 (1,829)	30 (762)	3,933 (1,784)[5,6]	1
3,882	3,000	720	63	95 (2,413)	84 (2,134)	30 (762)	5,168 (2,344)[7]	2
4.16 kV								
228	300	400	63	80 (2,038)	72 (1,829)	30 (762)	2,550 (1,157)[5,6]	1
306	400	400	63	80 (2,038)	72 (1,829)	30 (762)	2,681 (1,216)[5,6]	1
402	500	400	63	80 (2,038)	72 (1,829)	30 (762)	2,796 (1,268)[5,6]	1
618	800	400	63	80 (2,038)	72 (1,829)	30 (762)	2,990 (1,356)[5,6]	1
696	900	400	63	80 (2,038)	72 (1,829)	30 (762)	3,370 (1,529)[5,6]	1
930	1,250	400	63	80 (2,038)	72 (1,829)	30 (762)	3,479 (1,578)[5,6]	1
1,086	1,500	400	63	80 (2,038)	72 (1,829)	30 (762)	3,537 (1,604)[5,6]	1
1,440	2,000	400	63	80 (2,038)	72 (1,829)	30 (762)	4,150 (1,882)[5,6]	1
1,620	2,250	400	63	80 (2,038)	72 (1,829)	30 (762)	4,221 (1,915)[5,6]	1
2,510	3,500	720	63	95 (2,413)	84 (2,134)	30 (762)	6,283 (2,850)[7]	2
3,670	5,000	720	63	95 (2,413)	84 (2,134)	30 (762)	6,283 (2,850)[7]	2

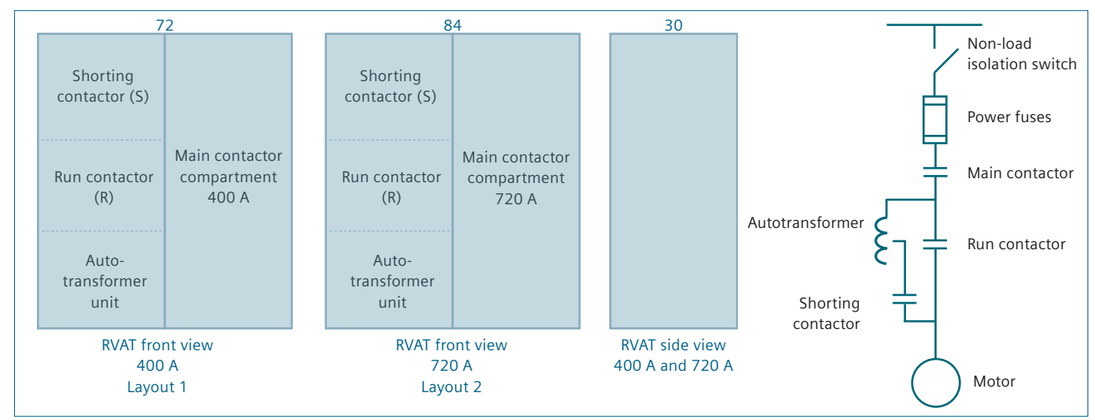

Figure 84: Typical one-line diagram (power and control schemes)

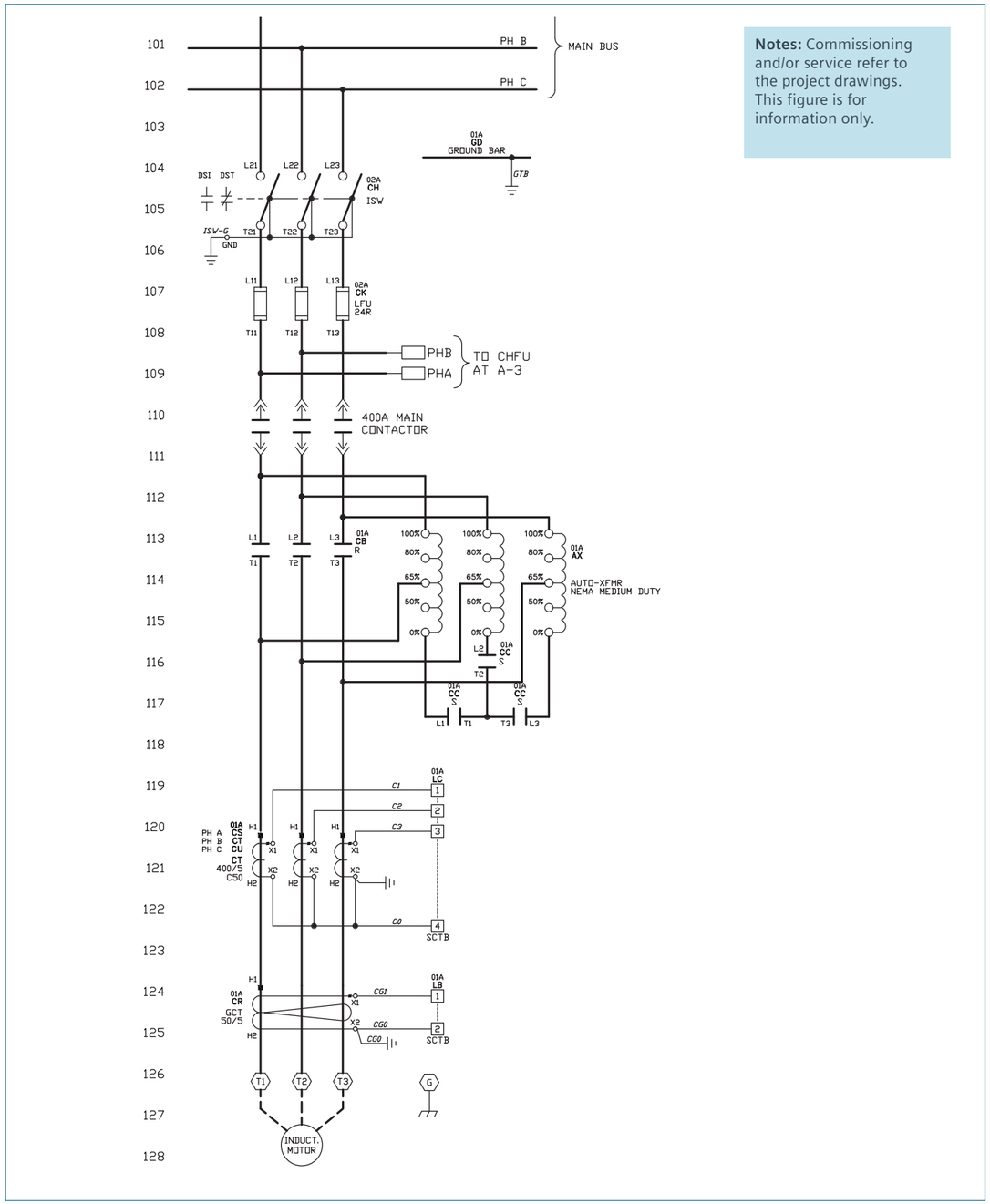

Figure 85: Typical one-line diagram (power and control schemes)

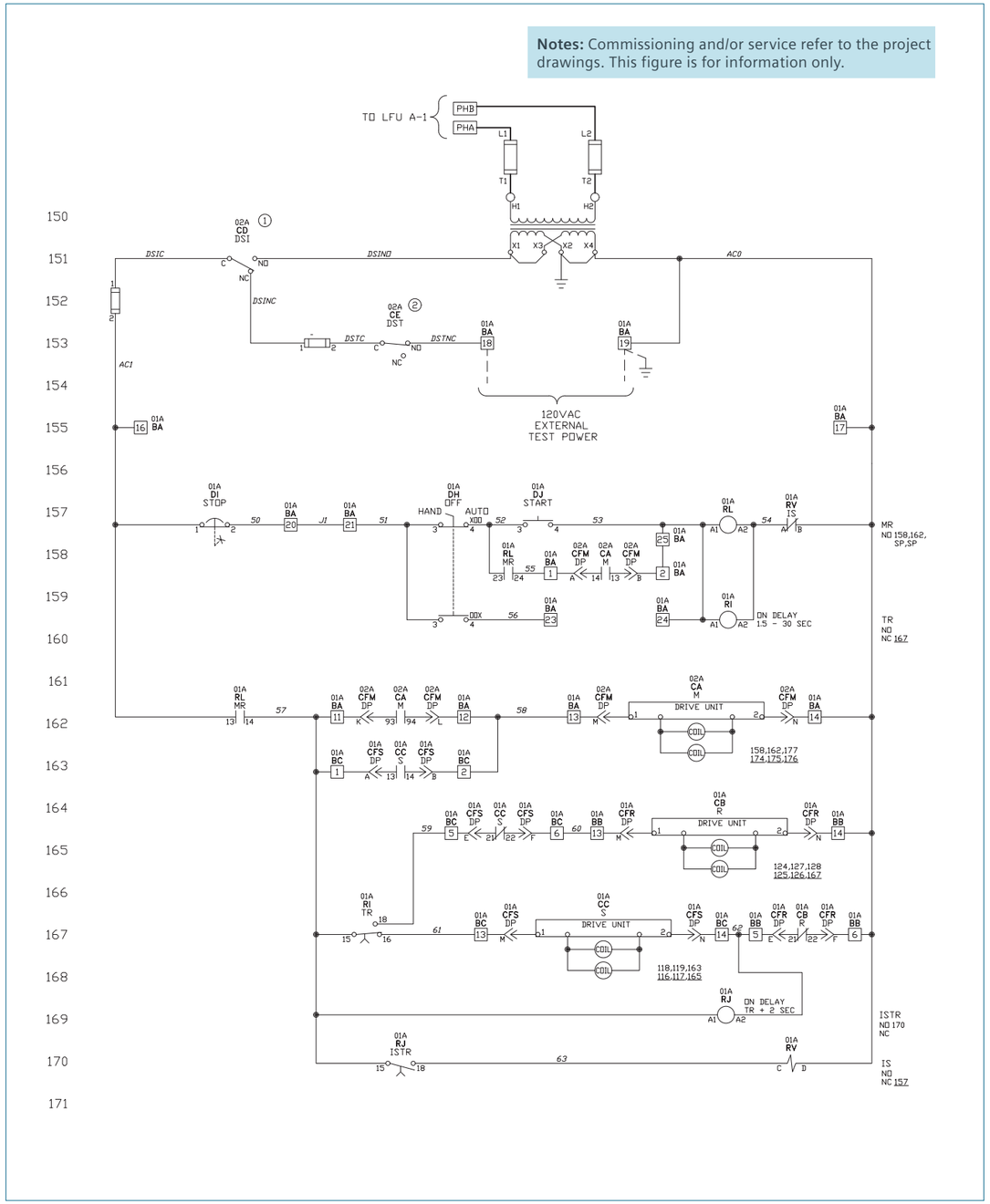

Figure 86: 400 A SIMOVAC RVAT controller

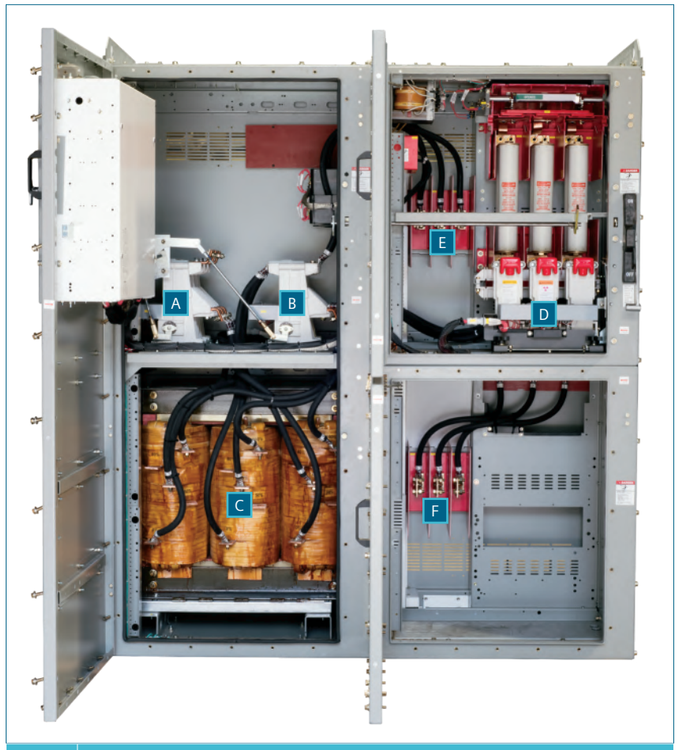

Item	Description
A	Shorting contactor
B	Run contactor
C	Autotransformer
D	Isolating switch, power fuses, and main contactor
E	Outgoing terminations
F	Incoming terminations

Table 16: Starting characteristics

Tap setting[1]	% motor voltage	% motor current	% line current	% torque
80% tap	80	80	67	64
65% tap	65	65	45	42
50% tap	50	50	28	25

Footnote:
1. Factory set on 65%.

Operation
With the isolation switch closed, pressing the start button energizes interposing relay (MR) and the on-delay, transfer-timing relay (TR). The normally open MR contact closes and energizes shorting contactor (S) through normally closed TR contact. The seal-in circuit of start pushbutton keeps the MR and TR relay energized. An auxiliary contact (S) of the shorting contactor energizes the operating coil of main contactor (M). The main contactor is sealed in by its own auxiliary contact. Incoming line voltage is applied to primary coil of autotransformer through the main contactor and shorting contactor, the secondary voltage of autotransformer (at a percentage tap) is then applied to the motor stator winding. The motor accelerates on reduced line voltage determined by the percentage tap used in the autotransformer.

After a definite period of time, timing relay (TR) times out and de-energizes the starting contactor coil (S) causing this contactor to drop open. This places a portion of the autotransformer winding (between 100% tap to the connected percentage tap) in series with the motor. This portion of the autotransformer acts as a reactor which keeps the motor connected to the line with reduced voltage. As soon as contactor (S) opens, run (R) contactor closes through the normally open TR contact and normally closed auxiliary or contactor S opens. This puts the motor on full-line voltage. The closed-transition starting sequence is now completed and the motor is accelerated to its full running condition.

Starting characteristics
The various taps on the autotransformer provide the option for different starting voltages. Higher voltage taps are used for applications that require high starting torque, or to limit the accelerating period within the duty cycle rating of the autotransformer. Controllers are normally set to the 65-percent voltage tap when it leaves the factory.

Table 17: Medium-duty starting cycle

Duty cycle	Duration
ON	30 seconds
OFF	30 seconds
Starts	Two times (for a total of three cycles with first start from ambient)
Reset	One hour
ON	30 seconds
OFF	30 seconds
Repeat	Two times (for a total of three cycles)

Starting-duty cycle
The autotransformers used in Siemens RVAT motor controllers are three coils and conform to UL 347 6th edition for medium duty and are suitable for general motor starting service.

The starting duty-cycle rating based on a temperature rise of 115 °C, 65% tap, with tap current 300% of motor full-load current and a power factor of 50% or less is in Table 17.

If it is suspected or found that the acceleration period is longer than 30 seconds for larger motors (greater 200 HP), consult factory and motor manufacturer.

The timing cycle of the transfer-timing relay (TR) should be selected to obtain transfer near the point where the motor has accelerated to its maximum speed on reduced voltage.

Note that the TR relay functionality may be included in the settings of an optional multi-function microprocessor-based motor protection relay rather than a stand-alone relay.

The following procedure is recommended for proper adjustment of the transfer-timing relay.

An initial trial start should be made with a temporary maximum time setting of the transfer relay more than the anticipated accelerating time of the motor: 25-30 seconds.

Record the time it takes for the motor to accelerate to approximately 90% speed.

If a tachometer or other speed indicating device is not available, a clip-on ammeter may be used.

Note the time required to the point where the motor current drops off rapidly.

When the acceleration time to reach maximum speed at reduced voltage is found, add two or three seconds and use this for the time setting of the timing relay.

The time setting is made by turning the adjustment screw on the timing relay.

The various taps on the autotransformer are provided to give different starting voltages. The numbers on the taps indicate the percentage of the applied line voltage available at that tap.

Higher voltage taps are used for applications requiring high-starting torque, or to limit the accelerating period within the duty-cycle rating of the autotransformer.

Controllers are normally connected to the 65-percent voltage tap when it leaves the factory

Published by Siemens Industry, Inc. 2020.

Siemens Industry
7000 Siemens Road
Wendell, North Carolina 27591

For more information, including service or parts,
please contact our 24/7 Customer Support Center.
Phone: +1 (800) 333-7421

To request a service or parts quote online,
visit: www.usa.siemens.com/techsupport
or e-mail callcenter.industry@siemens.com

www.usa.siemens.com/simovac

Order no. IC1000-F320-A105-V6-4A00

Printed in U.S.A.