Fusible Bus Plugs

Sentron II Fusible Bus Plugs are available in 240V and 600V, 30, 60, 100, 200, 400, and 600 amp frames. An optional compact version of the 400 amp bus plug may be ordered, allowing five bus plugs to fit on one side of a 10ft. (30.5m) busway section. Due to location of the conduit knockouts this is recommended primarily for horizontal applications. Refer to dimensional diagrams for more specific design information. Sentron Fusible Bus Plugs are manufactured with Siemens switches that feature visible blade technology and a 200kA short circuit rating. Fusible bus plugs are compatible with H, R, T, K, J, and B.S. fuses. (Fuses are not included with bus plugs.) An easy to read "position indicator" label, designed to be visible from the shop floor, clearly marks whether the bus plug is in the "On" or "Off" position. All lugs have a temperature rating of 60/75° C.

Refer to the "How to Build a Catalog Number" diagram on page 26 for easy ordering instructions.

Standard Fusible Bus Plug Ratings (IP40, IP55)

Plug-In Units Series	Fused Sw. Max. Rating	Fused Sw. Series	Fuse Class	Fuse Kits R Fuse Kit	T Fuse Kit	J Fuse Kit	Max. Short Circuit Current Rating
SLID_21	30A, 240V	MCS603	H, K, R, J, B.S.	SLR2030	-	-	200KA, 240V, 3-ph
SLID_61	30A, 600V	MCS603	H, K, R, J, B.S.	SLR6030	-	-	200KA, 600V, 3-ph
SLID_22	60A, 240V	MCS606	H, K, R, J, B.S.	SLR2060	-	-	200KA, 240V, 3-ph
SLID_62	60A, 600V	MCS606	H, K, R, J, B.S.	SLR6060	-	-	200KA, 600V, 3-ph
SLID_23	100A, 240V	MCS610	H, K, R, J, T, B.S.	SLR2100	SLT2100	-	200KA, 240V, 3-ph
SLID_63	100A, 600V	MCS610	H, K, R, J, T, B.S.	SLR6100	SLT6200	-	200KA, 600V, 3-ph
SLID_24	200A, 240V	MCS620	H, K, R, J, T, B.S.	SLR2200	SLT2200	①	200KA, 240V, 3-ph
SLID_64	200A, 600V	MCS620	H, K, R, J, T, B.S.	SLR6200	SLT6200	①	200KA, 600V, 3-ph
SLID_25	400A, 240V	MCS640	H, K, R, J, T, B.S.	SLR2400	SLT2400	-	200KA, 240V, 3-ph
SLID_65	400A, 600V	MCS640	H, K, R, J, T, B.S.	SLR6400	SLT6400	-	200KA, 600V, 3-ph
SLID_25__CMP	400A CMP, 240V	MCS640	H, K, R, J, T, B.S.	SLR2400	SLT2400	-	200KA, 240V, 3-ph
SLID_65__CMP	400A CMP, 600V	MCS640	H, K, R, J, T, B.S.	SLR6400	SLT6400	-	200KA, 600V, 3-ph
SLIDS_26	600A, 240V	MCS660	H, K, R, J, T, B.S.	SLR2600	SLT2600	SLJ2600	200KA, 240V, 3-ph
SLIDS_66	600A, 600V	MCS660	H, K, R, J, T, B.S.	SLR6600	SLT6600	SLJ6600	200KA, 600V, 3-ph

① Relocate Load Base

Standard Fusible Bus Plug Horsepower Ratings

Plug-In Units	Amp	240V, 1-Phase		240V, 3-Phase		240V DC	480V, 3-Phase		600V, 3-Phase	
Series	Rating	Std.	Max.	Std.	Max.	Std.	Std.	Max.	Std.	Max.
SLID_21	30A	1.5	3.0	3.0	7.5	5.0	-	-	-	-
SLID_22	60A	3.0	10.0	7.5	15.0	10.0	-	-	-	-
SLID_23	100A	7.5	15.0	15.0	30.0	20.0	-	-	-	-
SLID_24	200A	15.0	-	25.0	60.0	40.0	-	-	-	-
SLID_25	400A	-	-	50.0	125.0	50.0	-	-	-	-
SLIDS_26	600A	-	-	75.0	200.0	-	-	-	-	-
SLID_61	30A	-	-	-	-	5.0	5.0	15.0	7.5	20.0
SLID_62	60A	-	-	-	-	10.0	15.0	30.0	15.0	50.0
SLID_63	100A	-	-	-	-	20.0	25.0	60.0	30.0	75.0
SLID_64	200A	-	-	-	-	40.0	50.0	125.0	60.0	150.0
SLID_65	400A	-	-	-	-	50.0	100.0	250.0	125.0	350.0
SLIDS_66	600A	-	-	-	-	-	150.0	400.0	200.0	500.0

Fusible Bus Plugs, Dimensions and Weights (Enclosure only)

Ampere Rating	Dimensions Inches (mm) "A"	"B"	"C"	"D" max.	"E"	"F"	"G"	"J1"	"J2"	"K1"	"K2"	"L"	Weight lbs (kg)
30	15.25 (387)	10.25 (260)	9.25 (235)	4.75 (121)	2.50 (64)	2.50 (64)	-	3.50 (89)	-	2.25 (57)	-	-	35.0 (15.87)
60	15.25 (387)	10.25 (260)	9.25 (235)	4.75 (121)	2.50 (64)	2.50 (64)	-	3.50 (89)	-	2.25 (57)	-	-	35.0 (15.87)
100	20.25 (514)	10.25 (260)	9.25 (235)	4.75 (121)	2.50 (64)	2.50 (64)	-	3.25 (83)	-	3.00 (76)	-	-	43.5 (19.73)
200	21.75 (552)	16.75 (425)	11.25 (286)	4.75 (121)	5.75 (146)	5.75 (146)	-	4.00 (102)	7.00 (178)	3.25 (83)	7.75 (197)	-	66.0 (29.93)
400①	39.25 (997)	16.75 (425)	15.25 (387)	2.50 (64)	5.75 (146)	5.75 (146)	26.50 (673)	-	-	-	-	18.50 (470)	145.0 (65.77)
400 CMP	21.75 (552)	16.75 (425)	15.25 (387)	4.75 (121)	5.75 (146)	5.75 (146)	-	10.75 (273)		3.50 (89)	-	18.50 (470)	98.0 (44.45)
600①	39.25 (997)	16.75 (425)	15.25 (387)	2.50 (64)	5.75 (146)	5.75 (146)	26.50 (673)	-	-	-	-	19.75 (502)	195.0 (88.45)

① See split cover drawing below

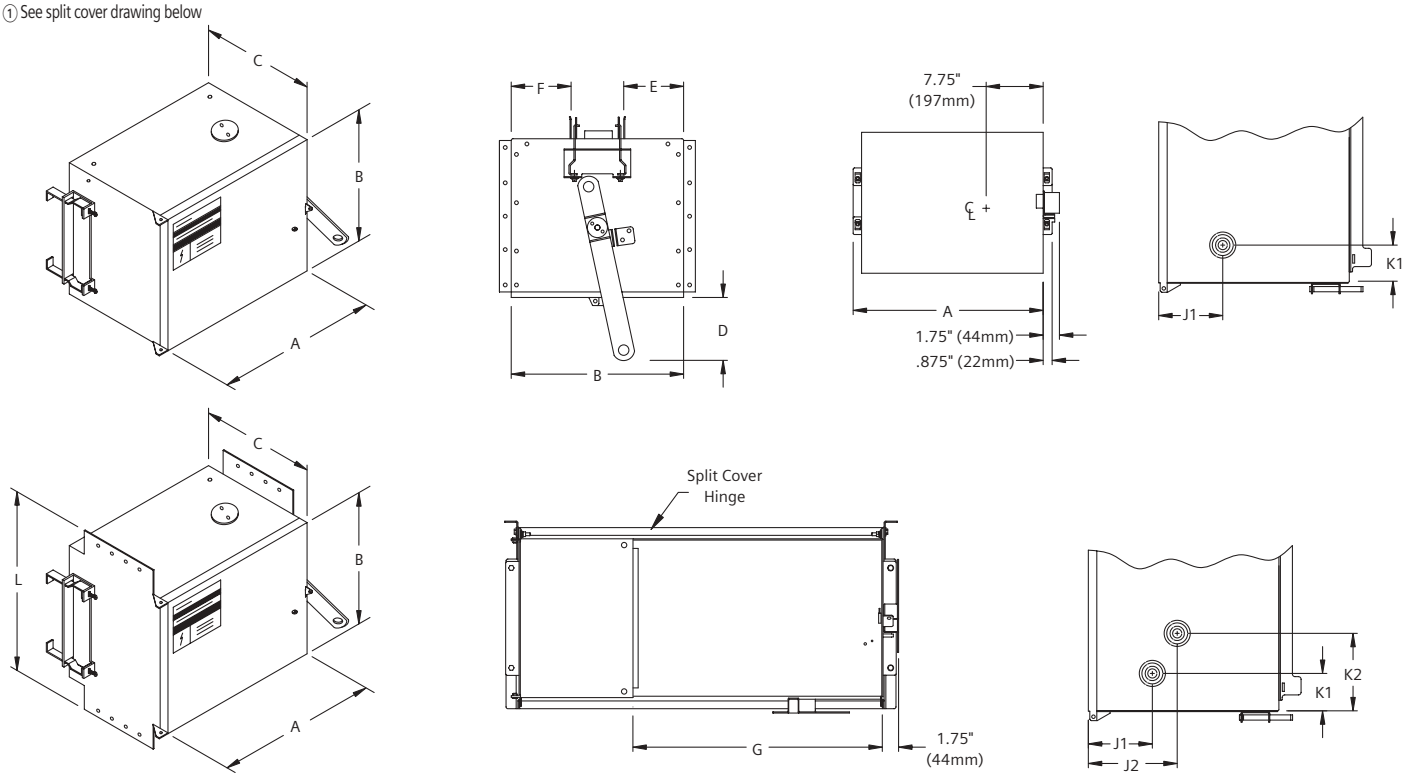

Fusible Switch Plugs, Load Lugs and Knockouts

Ampere Rating	Ground Lug Cu/Al	Neutral Lug Cu/Al	Phase Lug Cu/Al	Knockout sizes In. (mm)
30/60	#14-2	#14-2	#14-1/0	⅞ (22), 1⅛ (29), 1⅜ (35), 1¾ (44), 2 (51), 2½ (64)
100	#14-2	#14-2	#14-1/0	⅞ (22), 1⅛ (29), 1⅜ (35), 1¾ (44), 2 (51), 2½ (64)
200	#14-2	#6-350 kcmil	#6-350 kcmil	2 (51), 2½ (64), 3 (76), 3⅝ (92), 4⅛ (105)
400	#6-250	1/0-600 kcmil or (2) 1/0 250 kcmil	1/0-600 kcmil or (2) 1/0 250 kcmil	⅞ (22), 1⅛ (29), Pilot
400CMP	#6-250	1/0-500 kcmil or (2) 1/0 250 kcmil	1/0-500 kcmil or (2) 1/0 250 kcmil	⅞ (22), 1⅛ (29), Pilot
600	#6-250	1/0-600 kcmil or (2) 1/0 250 kcmil	1/0-600 kcmil or (2) 1/0 250 kcmil	⅞ (22), 1⅛ (29), Pilot

Sentron II Wall Clearance and Bus Plug Dimensions

30A-400A

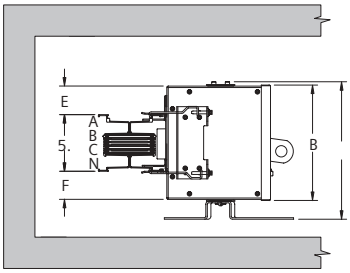

Plan View
Plug w/ Load Side Up
(Note Phasing)

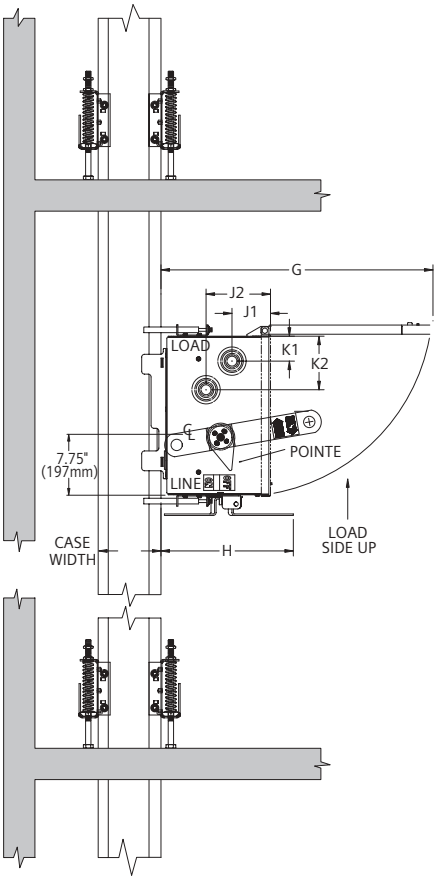

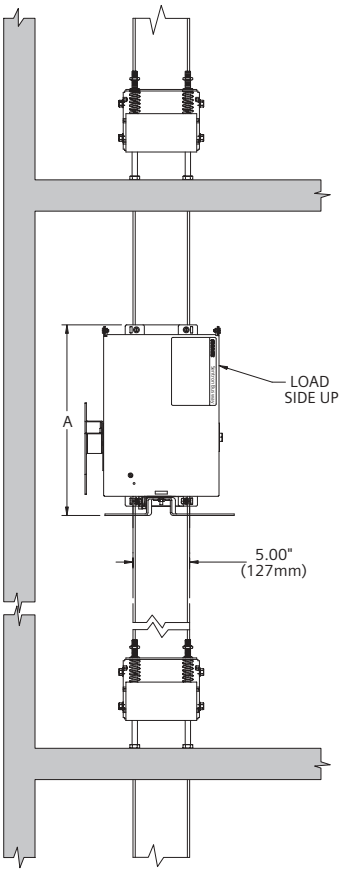

600A and 800A
Cradle Mounted

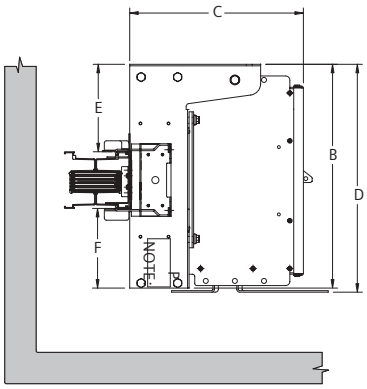

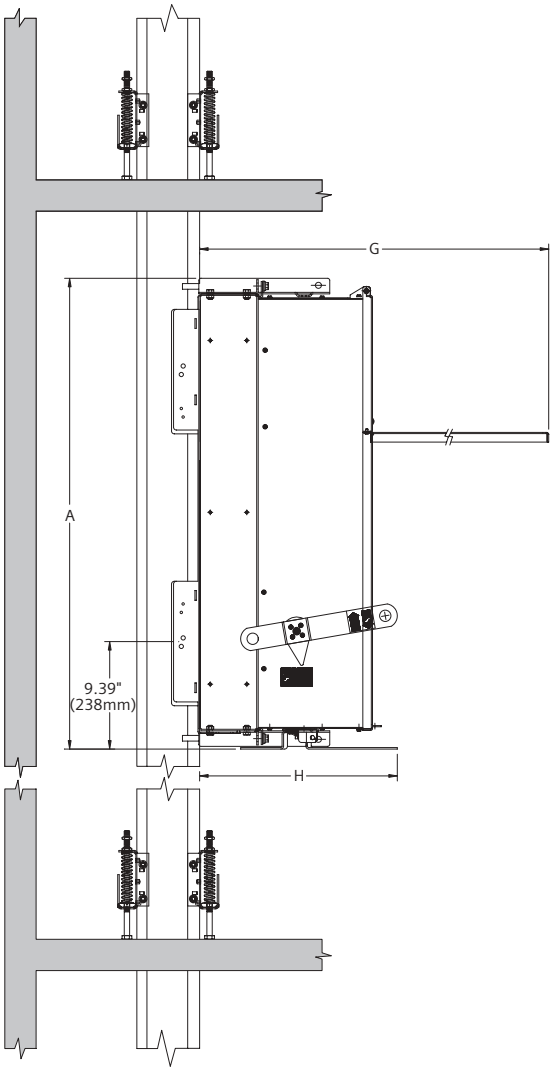

Sentron II Wall Clearance and Bus Plug Dimensions, in. (mm)

Dim. Legend	Circuit Breaker Plugs Sentron II										Fusible Switch Plugs Sentron II					
	No Cradle						Cradle				No cradle					Cradle
	E Frame		F Frame ⑥		J Frame ⑥		L Frame		M Frame		30/60	100	200	400 ⑥	400 ⑥	600
	Std.	Current Limiting	Std.	Current Limiting	Std.	Current Limiting	Std.	Current Limiting	Std.	Current Limiting	Switch	Switch	Switch	Switch	Compact Switch	Switch
A	17.00 (432)	22.00 (559)	22.00 (559)	27.00 (686)	23.50 (597)	30.50 (775)	41.50 (1054)	41.50 (1054)	41.50 (1054)	41.50 (1054)	17.00 (432)	22.00 (559)	23.50 (597)	41.00 (1041)	23.25 (591)	41.50 (1054)
B	10.25 (260)	10.25 (260)	10.25 (260)	10.25 (260)	16.75 (425)	16.75 (425)	19.75 (502)	19.75 (502)	19.75 (502)	19.75 (502)	10.25 (260)	10.25 (260)	16.75 (425)	16.75 (425) ③	16.75 (425) ③	19.75 (502)
C	9.25 (235)	9.25 (235)	9.25 (235)	9.25 (235)	11.25 (286)	11.25 (286)	15.25 (387)	15.25 (387)	15.25 (387)	15.25 (387)	9.25 (235)	9.25 (235)	11.25 (286)	15.25 (387)	15.75 (400)	15.25 (387)
D	12.25 (311)	12.25 (311)	12.25 (311)	12.25 (311)	18.75 (476)	18.75 (476)	20.00 (508)	20.00 (508)	20.00 (508)	20.00 (508)	12.25 (311)	12.25 (311)	18.75 (476)	19.25 (489)	18.25 (464)	20.00 (508)
E	2.50 (64)	2.50 (64)	2.50 (64)	2.50 (64)	5.75 (146)	5.75 (146)	7.75 (197)	7.75 (197)	7.75 (197)	7.75 (197)	2.50 (64)	2.50 (64)	5.75 (146)	5.75 (146) ④	5.75 (146) ④	8.00 (203)
F	2.50 (64)	2.50 (64)	2.50 (64)	2.50 (64)	2.75 (146)	2.75 (146)	7.00 (178)	7.00 (178)	7.00 (178)	7.00 (178)	2.50 (64)	2.50 (64)	5.75 (146)	5.75 (146) ④	5.75 (146) ④	8.25 (210)
G	26.00 (660)	31.00 (787)	31.00 (787)	36.00 (914)	34.50 (876)	41.50 (1054)	41.50 (1054)	41.50 (1054)	41.50 (1054)	41.50 (1054)	26.00 (660)	31.00 (787)	34.50 (876)	42.00 (1067)	36.50 (927)	41.25 (1054)
H	14.25 (362)	14.25 (362)	14.25 (362)	14.25 (362)	16.50 (419)	16.50 (419)	17.50 (445)	17.50 (445)	17.50 (445)	17.50 (445)	14.25 (362)	14.25 (362)	16.50 (419)	18.00 (457)	18.00 (457)	17.50 (445)
J1	3.50 (89)	3.50 (89)	3.25 (83)	3.25 (83)	4.00 (102)	4.00 (102)	- -	- -	- -	- -	3.50 (89)	3.25 (83)	4.00 (102)	- -	10.75 (273) ⑤	- -
J2	- -	- -	- -	- -	- -	- -	- -	- -	- -	- -	- -	- -	7.00 (178)	- -	- -	- -
K1	2.25 (57)	2.25 (57)	3.25 (83)	3.25 (83)	3.25 (83)	3.25 (83)	- -	- -	- -	- -	2.25 (57)	3.00 (76)	3.25 (83)	- -	3.50 (89) ⑤	- -
K2	- -	- -	- -	- -	- -	- -	- -	- -	- -	- -	- -	- -	7.75 (197)	- -	- -	- -

Legend:
A= Length of enclosure including handle
B= Height of enclosure
C= Depth of enclosure
D= Height of enclosure including optional handle location
E= Extension of plug above top of busway
F= Extension of plug below bottom of busway
G= Cover (depth) clearance for enclosure
H= Depth of enclosure from handle to edge of busway
J= Knockout/ pilot hole location (horizontal)
K= Knockout/ pilot hole location (vertical)

① Add 1.78 in. (45mm) to include height of box aux. mtg. flanges
② Add .89 in. (23mm) to include box aux. mtg. flange height
③ Add 2.00 in. (51mm) to include height of box aux. mtg. flanges
④ Add 1.00 in. (25mm) to include box aux. mtg. flange height
⑤ Knockout only on pointer side
⑥ 200%N Applications
- for F-Frame Rated ≤200A use L-Frame Dims.
- for J-Frame Rated ≤400A use L-Frame Dims.
- for 400A Fusible switch use 600A Switch Dims.
⑦ Dual handle placement shown for reference.