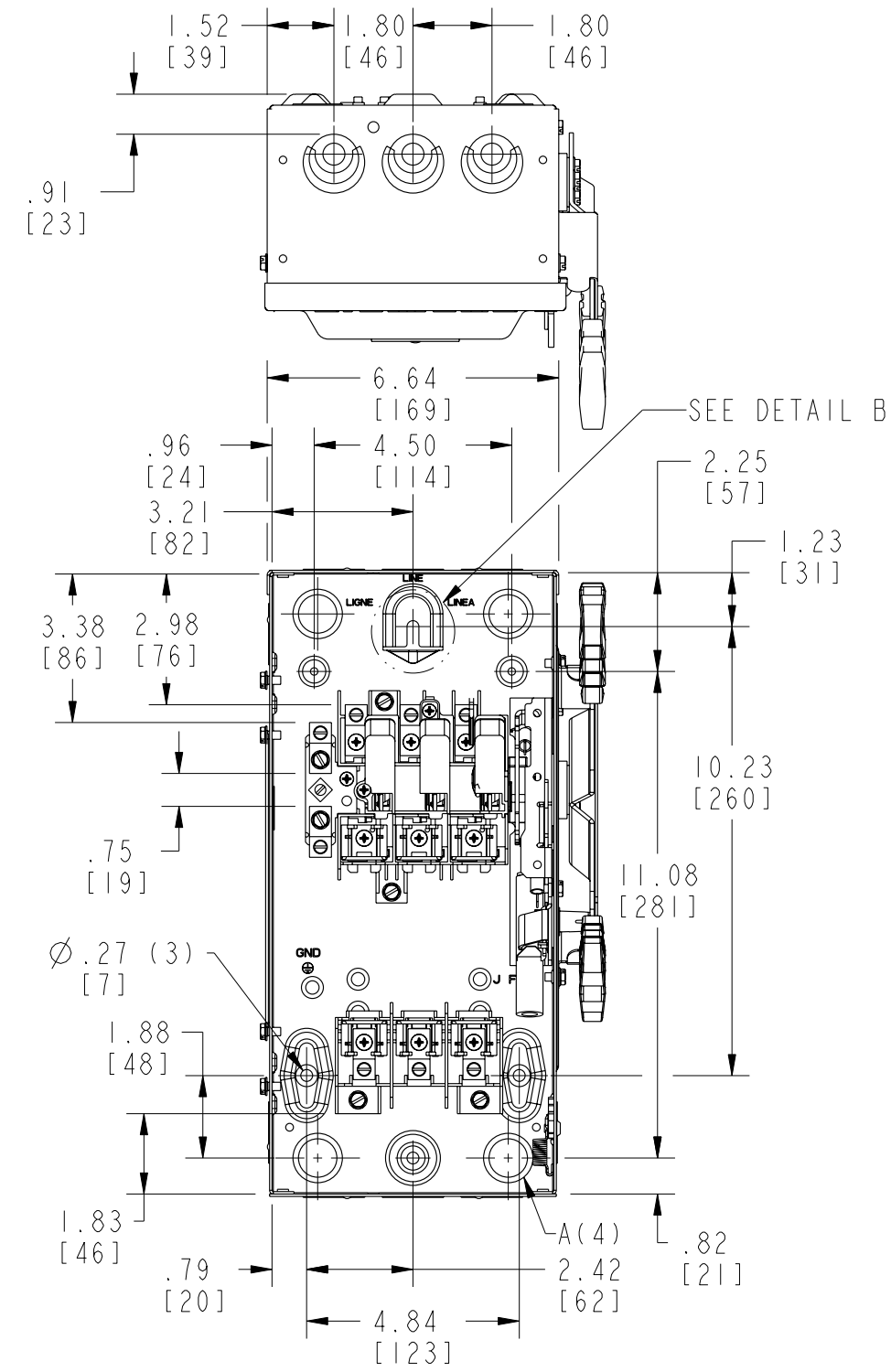

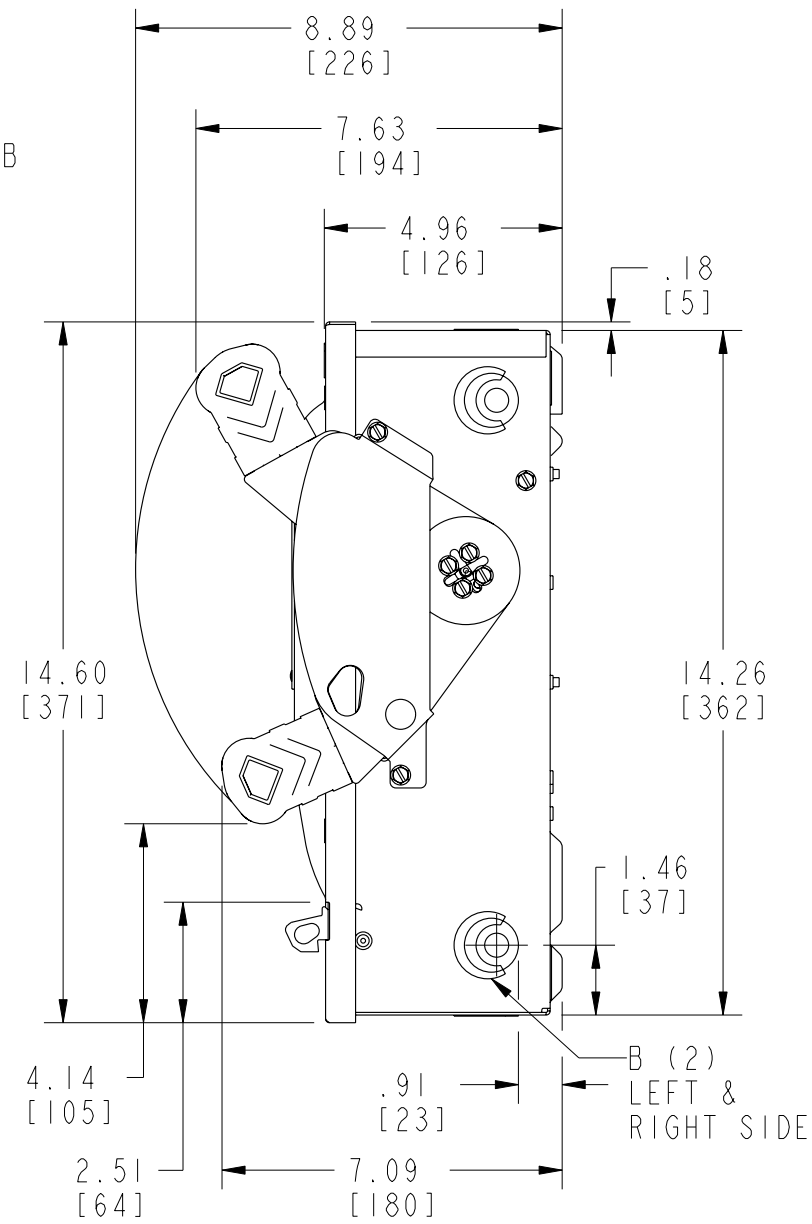

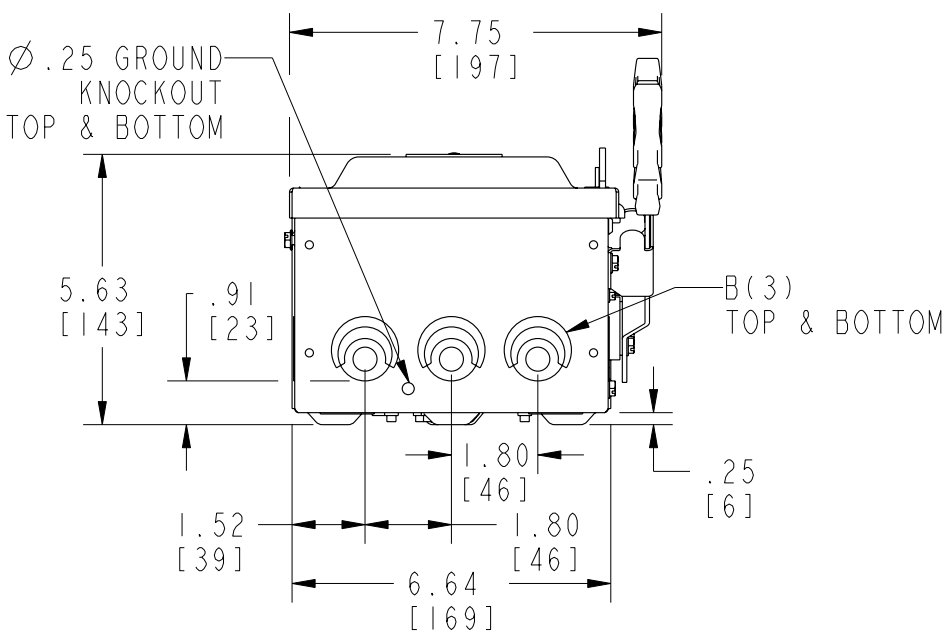

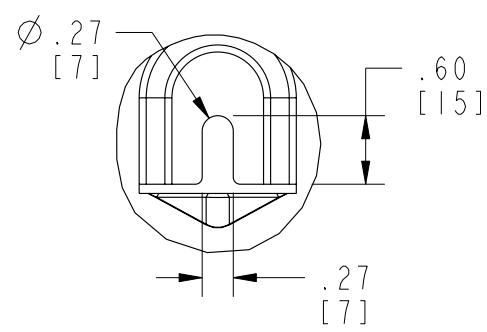

DETAIL B
SCALE 0.600

KNOCKOUT CODE	CONDUIT SIZE
A (Concentric)	.75 1.00
B (Tangential)	.50 .75 1.00

	LINE SIDE WIRE BEND	LOAD SIDE WIRE BEND
240V Fused	3.02 (77)	5.36 (136)
600V Fused	3.02 (77)	2.61 (66)

Enclosure:
Cold Rolled Steel
.054 Thick (17 Gauge)
Finish: ANSI Grey #61 Paint

The information provided in this drawing contains merely general descriptions or characteristics of performance which in case of actual use do not always apply as described or which may change as a result of further development of the products. An obligation to provide the respective characteristics shall only exist if expressly agreed in the terms of contract.

All product designations may be trademarks or product names of Siemens AG or supplier companies whose use by third parties for their own purposes could violate the rights of the owners.

CATALOG NUMBERS:

HF221N* HF361**
HF321N HF361N

* 2 pole switches will not include middle pole current carrying components as shown
** Neutral not included as shown

UNLESS OTHERWISE SPECIFIED:
DIMENSIONS ARE IN INCHES AND MILLIMETERS [ ]
DIMENSIONS SHOWN ACCURATE TO ±1/8 INCH

SIEMENS INDUSTRY, INC.
5400 TRIANGLE PARKWAY
NORCROSS, GA 30092

1-800-241-4453
INFO.US @ SIEMENS.COM
WWW.USA.SIEMENS.COM/SWITCHES

Siemens Industry, Inc.

HEAVY DUTY360A
TYPE 1, (FUSIBLE)

DWG NO. HD 30A TYPE1 FUSIBLE

SCALE: 0.200 | SHEET 2 OF 2

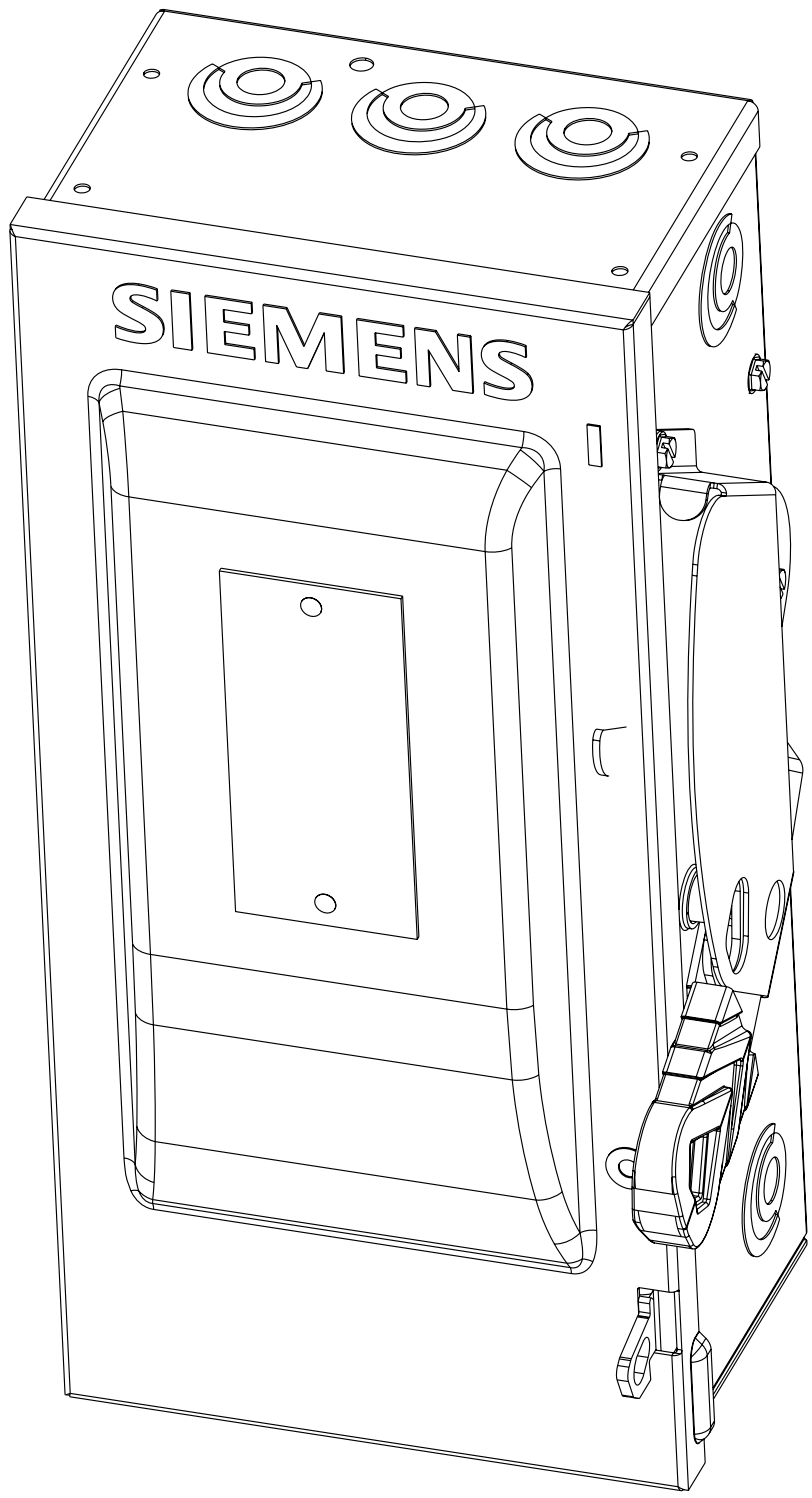

CATALOG NUMBERS:	HF221N HF321N HF261 HF361 HF361N

CONFIDENTIAL- PROPERTY OF Siemens Industry, Inc.

The information provided in this drawing contains merely general descriptions or characteristics of performance which in case of actual use do not always apply as described or which may change as a result of further development of the products. An obligation to provide the respective characteristics shall only exist if expressly agreed in the terms of contract.

All product designations may be trademarks or product names of Siemens AG or supplier companies whose use by third parties for their own purposes could violate the rights of the owners.

UNLESS OTHERWISE SPECIFIED:
DIMENSIONS ARE IN INCHES AND MILLIMETERS [ ]
DIMENSIONS SHOWN ACCURATE TO ±1/8 INCH

SIEMENS INDUSTRY, INC.
5400 TRIANGLE PARKWAY
NORCROSS, GA 30092

1-800-241-4453
INFO.US @ SIEMENS.COM
WWW.USA.SIEMENS.COM/SWITCHES

Siemens Industry, Inc.

HEAVY DUTY360A
TYPE 1, (FUSIBLE)

DWG NO. HD 30A TYPE1 FUSIBLE

SCALE: 0.200 | SHEET 1 OF 1