SIEMENS

Data Sheet

VBII Heavy Duty Safety Switch with Viewing Window

30 A, 600V, Type 12 and 4/4X

usa.siemens.com/switches

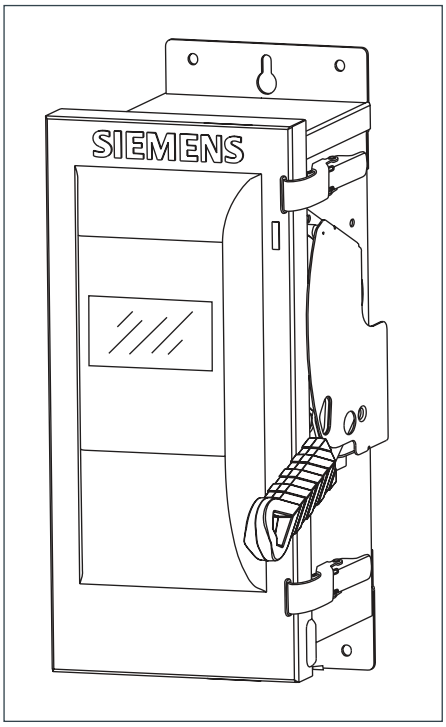

Standards and Ratings

- UL Listed under file #E4776
- Meets UL98 for switches and UL 50 for enclosures
- Meets NEMA Standard KS-1 for enclosed switches
- Meets NEC wire bending space requirements
- Rated 10,000 AIC at 250Vdc with Class H fuses or 200,000 AIC with Class R and J fuses
- I^2t rated ($Amps^2$ x Seconds = 50,000)
- 12X overload current rating exceeds 10X industry standard
- Suitable for use as service entrance equipment
- Includes internal shields which meet NEC 2020 230.62 line side barrier requirements

Features

- Quick-make and break switching action
- Double break visible blade design
- Highly visible ON/OFF indication
- Window permits viewing of both visible blades and indicating type fuses
- Rugged installer friendly enclosure design
- Modular design allows quick and easy replacement of parts
- Front removable lugs which can easily be converted to copper body or compression type lugs
- Defeatable dual cover interlock

Product Specifications

Heavy Duty 30A, 600V Type 12 and Type 4/4X

General Information

Catalog Number	Volts	Description	Shipping Weight (lbs.)
Type 12 Industrial [1]			
HF361JW	600	3 Pole, 3 Wire, Fusible	17
HNF361JW	600	3 Pole, 3 Wire, Non-Fusible	14
Type 4/4X Stainless Steel			
HF361SW	600	3 Pole, 3 Wire, Fusible	17
HF361SSW [6]	600	3 Pole, 3 Wire, Non-Fusible	17
HNF361SW	600	3 Pole, 3 Wire, Non-Fusible	15
HNF361SSW [6]	600	3 Pole, 3 Wire, Non-Fusible	15

Horsepower Ratings [2] [3] [4] – 600 Volts

Catalog Number	3 Phase, 480V AC		3 Phase, 600 AC		250V DC
	Std	Max	Std	Max	
HF361JW	5	15	7 1/2	20	—
HF361SW & HF361SSW	5	15	7 1/2	20	—
HNF361JW	—	20 [5]	—	30	—
HNF361SW & HNF361SSW	—	20 [5]	—	30	—

Mechanical Lug Wire Range (60/75°C, Cu/Al)

Description	Wire Range
Line, Load Neutral	#12-6 AWG (Al) or #14-6 AWG (Cu)
Ground	#14-4 AWG

Accessories

Catalog Number	Description
HA161234	One Normally Open and Closed Auxiliary Switches
HA261234	Two Normally Open and Closed Auxiliary Switches
HA361234	Low Voltage Auxiliary Switch
HG61234	Equipment Ground Lug Kit (Factory installed)
HG261234	Isolated Equipment Ground Lug Kit
HP61	Fuse Puller (3 per kit)
HN612	Neutral Kit
HR612	600 Volt Class R Fuse Clip Kit (3 fuse clips per kit)
HLC612	Copper Lug Kit (9 lugs per kit)
HCL612	Compression Lug Neutral Barrier Kit
SSH100	1.00" Type 12 and 4X Hub

Replacement Parts

Catalog Number	Description
HFB612	Fusible Line Side Replacement Base (HF361JW, HF361SW)
HBB612	Fusible Load Side Replacement Base (HF361JW, HF361SW)
HNB612	Non-Fusible Line Side Replacement Base (HNF361JW, HNF361SW)
HH6123	Replacement Handle/Handle Guard (HH6123S for Type 4X)
HL612	Replacement Lug (3 lugs per kit)
HM6123	Replacement Mechanism (HM6123S for Type 4X)
[7]	Replacement Door

Compression Lugs [8]

Wire Size	Burndy		Thomas-Betts		Ilsco	
	CU Only	CU/AL	CU Only	CU/AL	CU Only	CU/AL
#14-10	—	—	—	60096 60097	—	—
#8	YA8C-L BOX YA8C-L1 BOX	—	54104 54130	60101 60102 61102	CRA-8	ACL-8 ACN-8
#6	—	—	—	61107	—	—

1 Also rated 3R/3S for outdoor use.
2 Dual horsepower ratings: Std - applies when non-time delay fuses are installed.
Max - applies when time-delay fuses are installed.
3 Horsepower ratings listed also apply to Design E motors with no derating.
4 Also rated 5HP at 250V DC.
5 Also rated 10HP on 3 phase, 240V AC systems.
6 The enclosure of catalog number HF361SSW and HNF361SSW is constructed from 316 grade stainless steel.
7 Place "DOOR" at the end of the switch catalog number.
8 If compression lugs are used for the neutral, order compression lug neutral barrier kit HCL612.

Dimension Drawings

Heavy Duty 30A, 600V Type 12 and Type 4/4X

Dimensions Inches (mm)

Cat No.	A	B	C	D	E	F	G
HF361JW HF361SW & HF361SSW	16.46 (418)	3.00 (76)	15.45 (393)	14.27 (362)	17.31 (440)	3.53 (90)	4.07 (103)
HNF361JW HNF361SW & HNF361SSW	13.33 (338)	1.75 (44)	12.31 (313)	11.12 (282)	14.61 (360)	3.53 (90)	.92 (23)

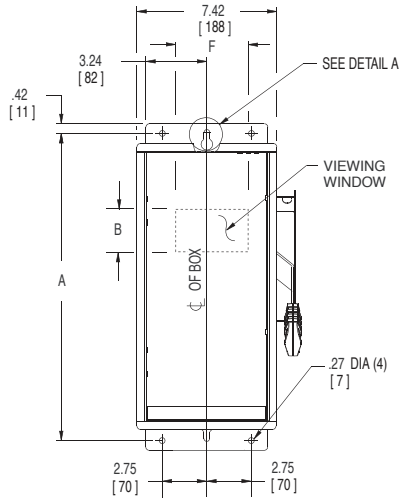

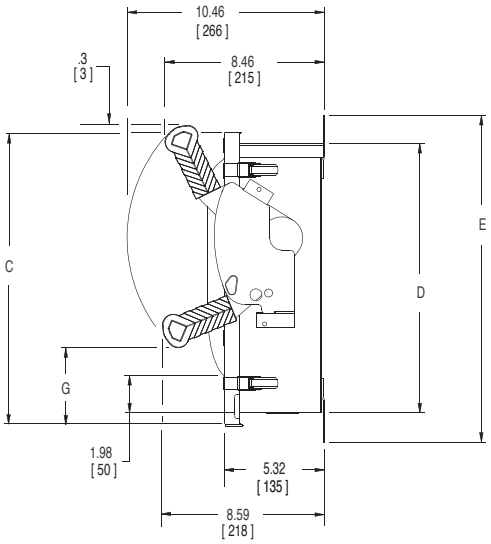

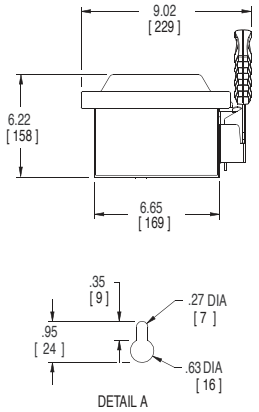

No knockouts in enclosures.
Dimensions shown in inches and millimeters ( ).
Dimension shown accurate to ± 1/8 inch.

	LINE SIDE WIRE BEND	LOAD SIDE WIRE BEND
600	3.02 (77)	2.61 (66)

Type 12 Enclosure:
Galvanized Steel
.054 Thick (17 Gauge)
Finish: ANSI Grey #61 Paint

HF361SW & HNF361SSW
Type 4X Enclosure: 304
Stainless Steel
.055 Thick (17 Gauge)

HF361SSW & HNF361SSW
Type 4X Enclosure:
316 Stainless Steel
.055 Thick (17 Gauge)

Published by
Siemens Industry, Inc. 2021.

Siemens Industry, Inc.
3617 Parkway Ln
Peachtree Corners, GA 30092

For more information, please contact
our Customer Support Center.
Phone: 1-800-241-4453
E-mail: info.us@siemens.com

usa.siemens.com/switches

Order No.: SSDS-HF3SW-0521
Printed in U.S.A.
© 2021 Siemens Industry, Inc.

The technical data presented in this document is based on an actual case or on as-designed parameters, and therefore should not be relied upon for any specific application and does not constitute a performance guarantee for any projects. Actual results are dependent on variable conditions. Accordingly, Siemens does not make representations, warranties, or assurances as to the accuracy, currency or completeness of the content contained herein. If requested, we will provide specific technical data or specifications with respect to any customer's particular applications. Our company is constantly involved in engineering and development. For that reason, we reserve the right to modify, at any time, the technology and product specifications contained herein.