SIEMENS

Instruction manual

Type GM38 38 kV metal-clad non-arc-resistant switchgear

Installation operation maintenance E50001-F710-A236-V3-4A00

www.usa.siemens.com/mvswitchgear

⚠ DANGER

Hazardous voltages and high-speed moving parts.

Will cause death, serious injury or property damage.

Always de-energize and ground the equipment before maintenance. Read and understand this instruction manual before using equipment. Maintenance should be performed only by qualified personnel. The use of unauthorized parts in the repair of the equipment or tampering by unqualified personnel will result in dangerous conditions which will cause death, severe injury or equipment damage. Follow all safety instructions contained herein.

Important

The information contained herein is general in nature and not intended for specific application purposes. It does not relieve the user of responsibility to use sound practices in application, installation, operation and maintenance of the equipment purchased. Siemens reserves the right to make changes in the specifications shown herein or to make improvements at any time without notice or obligation. Should a conflict arise between the general information contained in this publication and the contents of drawings or supplementary material or both, the latter shall take precedence.

Qualified person

For the purpose of this instruction manual a **qualified person** is one who is familiar with the installation, construction or operation of the equipment and the hazards involved. In addition, this person has the following qualifications:

- **Is trained and authorized** to de-energize, clear, ground and tag circuits and equipment in accordance with established safety procedures.
- **Is trained** in the proper care and use of protective equipment, such as: rubber gloves, hard hat, safety glasses or face shields, flash clothing, etc., in accordance with established safety practices.
- **Is trained** in rendering first aid.

Further, a qualified person shall also be familiar with the proper use of special precautionary techniques, personal protective equipment, insulation and shielding materials, and insulated tools and test equipment. Such persons are permitted to work within limited approach of exposed live parts operative at 50 volts or more, and shall, at a minimum, be additionally trained in all of the following:

- The skills and techniques necessary to distinguish exposed energized parts from other parts of electric equipment
- The skills and techniques necessary to determine the nominal voltage of exposed live parts
- The approach distances specified in NFPA 70E® and the corresponding voltages to which the qualified person will be exposed
- The decision-making process necessary to determine the degree and extent of the hazard and the personal protective equipment and job planning necessary to perform the task safely.

Note:

These instructions do not purport to cover all details or variations in equipment, nor to provide for every possible contingency to be met in connection with installation, operation or maintenance. Should further information be desired or should particular problems arise that are not covered sufficiently for the purchaser's purposes, the matter should be referred to the local sales office.

The contents of this instruction manual shall not become part of or modify any prior or existing agreement, commitment or relationship. The sales contract contains the entire obligation of Siemens Industry, Inc. The warranty contained in the contract between the parties is the sole warranty of Siemens Industry, Inc. Any statements contained herein do not create new warranties or modify the existing warranty.

Table of contents

Introduction

⚠ DANGER

Hazardous voltages and high-speed moving parts.

Will cause death, serious injury or property damage.

Always de-energize and ground the equipment before maintenance. Read and understand this instruction manual before using equipment. Maintenance should be performed only by qualified personnel. The use of unauthorized parts in the repair of the equipment or tampering by unqualified personnel will result in dangerous conditions which will cause death, severe injury or equipment damage. Follow all safety instructions contained herein.

Introduction

The type GM38 switchgear is designed to meet all applicable ANSI, NEMA and IEEE standards.

Successful application and operation of this equipment depends as much upon proper installation and maintenance by the user as it does upon the proper design and fabrication by Siemens.

This equipment is not classified as arc-resistant switchgear and has not been tested for resistance to internal arcing in accordance with ANSI/IEEE C37.20.7.

The purpose of this instruction manual is to assist the user in developing safe and efficient procedures for the installation, maintenance and use of the equipment.

This instruction manual applies to the switchgear structures. Refer to instruction manual E50001-F710-A238-X-XXXX for instructions applicable to the type 38-3AH3 circuit breakers.

Contact the nearest Siemens representative if any additional information is desired.

Signal words

The signal words "danger," "warning" and "caution" used in this instruction manual indicate the degree of hazard that may be encountered by the user. These words are defined as:

Danger - Indicates an imminently hazardous situation which, if not avoided, **will** result in death or serious injury.

Warning - Indicates a potentially hazardous situation which, if not avoided, **could** result in death or serious injury.

Caution - Indicates a potentially hazardous situation which, if not avoided, **may** result in minor or moderate injury.

Caution (without safety alert symbol) - Indicates a potentially hazardous situation which, if not avoided, **may** result in property damage.

Field service operation and warranty issues

Siemens can provide competent, well trained field service representatives to provide technical guidance and advisory assistance for the installation, overhaul, repair and maintenance of Siemens equipment, processes and systems. Contact regional service centers, sales offices or the factory for details, or telephone Siemens field service at 1-800-347-6659 or 1-919-365-2200 outside the U.S.

For medium voltage customer service issues, contact Siemens at 1-800-347-6659 or 1-919-365-2200 outside the U.S.

General description

Figure 1: Typical indoor type GM38 metal-clad switchgear

Introduction

Siemens type GM38 metal-clad switchgear is precision built equipment designed to function efficiently under normal operating conditions. It is designed and manufactured to operate within the parameters established in ANSI/IEEE C37 standards for metal-clad switchgear. Performance requirements of these standards have been met or exceeded by these designs. Specific standards which apply include ANSI/IEEE C37.20.2.

This equipment is not classified as arc-resistant switchgear and has not been tested for resistance to internal arcing in accordance with ANSI/IEEE C37.20.7.

The instructions included in this instruction manual are provided to aid you in obtaining longer and more economical service from your Siemens switchgear. For proper installation and operation, this information should be distributed to your operators and engineers.

By carefully following these instructions, difficulties should be avoided. However, these instructions are not intended to cover all details of variations that may be encountered in connection with the installation, operation and maintenance of this equipment.

Should additional information be desired, including replacement instruction manuals, contact your local Siemens representative.

Scope

These instructions cover the installation, operation and maintenance of Siemens type GM38 metal-clad switchgear assemblies using horizontal drawout vacuum circuit breakers. The equipment designs described in this instruction manual include indoor, Shelter-Clad walk-in aisle outdoor and non-walk-in outdoor configurations for applications up to 38 kV. A typical indoor switchgear assembly is shown in Figure 1: Typical indoor type GM38 metal-clad switchgear. All diagrams, descriptions and instructions apply to all of the above classes and designs unless noted otherwise.

Standard construction details of the switchgear, auxiliary equipment and necessary accessories are given in the appropriate sections. Special mechanical and electrical devices, furnished in accordance with purchase order requirements, are covered by supplementary instructions submitted with this instruction manual.

The equipment furnished has been designed to operate in a system having the circuit capacity specified by the purchaser. If for any reason the equipment is used in a different system or if the short-circuit capacity of the system is increased, the ratings of the equipment, including the momentary rating of the switchgear, the interrupting capacity of the circuit breakers and the bus capacity must be checked. Failure on the part of the user to receive approval of intended changes from Siemens may cause the warranty to be void.

This instruction manual applies to the switchgear structures. Refer to instruction manual E50001-F710-A238-X-XXXX for instructions applicable to the type 38-3AH3 vacuum circuit breakers.

General description

The switchgear described in this instruction manual is of the metal-clad type, as defined in ANSI/IEEE C37.20.2. All parts are completely enclosed within grounded barriers, the secondary control devices and primary circuits are isolated from each other by shutters or barriers, and the primary bus joints are completely covered with insulation materials to suit the voltage class of the equipment.

Siemens switchgear carries a type designation or class, as shown in Table 1: Switchgear designation. These designations may appear on drawings and familiarity with them will simplify communications with the factory.

Indoor equipment is arranged with the circuit breaker located in the lower compartment behind a blank front panel. This panel is opened to provide access to the circuit breaker. Upper compartments can be used for auxiliary devices, such as voltage transformers (VTs), and the front panel of the upper compartment is used for instrumentation and protective relaying devices. Typical indoor switchgear is shown in Figure 1: Typical indoor type GM38 metal-clad switchgear on page 6.

Shelter-Clad outdoor equipment consists of indoor equipment enclosed in a weather-resistant housing complete with an illuminated, walk-in aisle. Circuit breakers can be moved inside the aisle and control devices checked without exposure to the elements.

Non-walk-in outdoor switchgear consists of indoor switchgear enclosed in a weatherproof housing complete with a gasketed door over the inner front panels. Circuit breakers can be moved outside of the cubicles with the use of a lift truck. Non-walk-in outdoor equipment is used where it is felt that an enclosed service aisle is unnecessary, or space does not permit its use.

Design	Type
Indoor	GM38
Shelter-Clad single-aisle outdoor	SGM38
Shelter-Clad common-aisle outdoor	SGM38
Non-walk-in outdoor	OGM38

Table 1: Switchgear designation

General description

Receiving

Each group of type GM38 metal-clad switchgear is securely blocked and braced for shipment. It is crated, boxed or covered as required by shipping conditions. If special handling is required, it is so indicated. Relatively delicate instruments, protective relays and other devices are included, and the switchgear assembly must be handled carefully when unloading.

Identification

When the shipment includes more than one shipping group or equipment for more than one substation, marking tags are attached to each crate or package for identification. The drawing number on the tag is also on the shipping list. The shipping list identifies the contents with the unit numbers included in the shipping group. Refer to the general arrangement drawing for the location of each unit within the group lineup. Use this information to simplify the assembly operation and save unnecessary handling.

Inspection and unpacking

Inspect the equipment as soon as possible after receipt for any damage that may have occurred in transit. Before unpacking, examine the package itself, as a damaged package may indicate damage to the contents of the package. Be careful when unpacking equipment. The use of sledge hammers and crowbars may damage the finish, or the equipment itself. Use nail pullers. After unpacking, examine equipment for any possible damage. Check the shipping manifest to be certain that all items have been received. If there is a shortage, make certain it is noted on the freight bill and contact the carrier immediately. Notify Siemens medium-voltage customer service at 1-800-347-6659 (1-919-365-2200 outside the U.S.) of any shortage or damage.

Shipping damage claims

Important: The manner in which visible shipping damage is identified by consignee prior to signing the delivery receipt can determine the outcome of any damage claim to be filed.

Notification to carrier within 15 days for concealed damage is essential if loss resulting from unsettled claims is to be eliminated or minimized.

1. When shipment arrives, note whether equipment is properly protected from the elements. Note trailer number on which the equipment arrived. Note blocking of equipment. During unloading, make sure to count the actual items unloaded to verify the contents as shown on the delivery receipt.
2. Make immediate inspection for visible damage upon arrival and prior to disturbing or removing packaging or wrapping material. This should be done prior to unloading when possible. When total inspection cannot be made on vehicle prior to unloading, close inspection during unloading must be performed and visible damage noted on the delivery receipt. Take pictures if possible.
3. Any visible damage must be noted on the delivery receipt and acknowledged with the driver’s signature. The damage should be detailed as much as possible. It is essential that a notation "possible internal damage, subject to inspection" be included on delivery receipt. If the driver will not sign the delivery receipt with damage noted, the shipment should not be signed for by the consignee or their agent.
4. Notify Siemens immediately of any damage, at 1-800-347-6659 or 1-919-365-2200 outside the U.S.
5. Arrange for a carrier inspection of damage immediately.

Important: Do not move equipment from the place it was set when unloading. Also, do not remove or disturb packaging or wrapping material prior to carrier damage inspection. Equipment must be inspected by carrier prior to handling after receipt. This eliminates loss due to claims by carrier that equipment was damaged or further damaged on site after unloading.

6. Be sure equipment is properly protected from any further damage by covering it properly after unloading.
7. If practical, make further inspection for possible concealed damage while the carrier's inspector is on site. If inspection for concealed damage is not practical at the time the carrier's inspector is present, it must be done within 15 days of receipt of equipment. If concealed damage is found, the carrier must again be notified and inspection made prior to taking any corrective action to repair. Also notify Siemens immediately at 1-800-347-6659 or 1-919-365-2200 outside the U.S.
8. Obtain the original of the carrier inspection report and forward it along with a copy of the noted delivery receipt to Siemens at 1-800-347-6659 or 1-919-365-2200 outside the U.S. Approval must be obtained by Siemens from the carrier before any repair work can be performed. Before approval can be obtained, Siemens must have the above referenced documents. The carrier inspection report and/or driver's signature on the delivery receipt does not constitute approval to repair.

Note: Shipments are not released from the factory without a clear bill of lading. Approved methods are employed for preparation, loading, blocking and tarping of the equipment before it leaves the Siemens factory. Any determination as to whether the equipment was properly loaded or properly prepared by shipper for over-the-road travel cannot be made at the destination. If the equipment is received in a damaged condition, this damage to the equipment has to have occurred while en route due to conditions beyond Siemens' control. If the procedure outlined above is not followed by the consignee, purchaser or their agent, Siemens cannot be held liable for repairs. Siemens will not be held liable for repairs in any case where repair work was performed prior to authorization from Siemens.

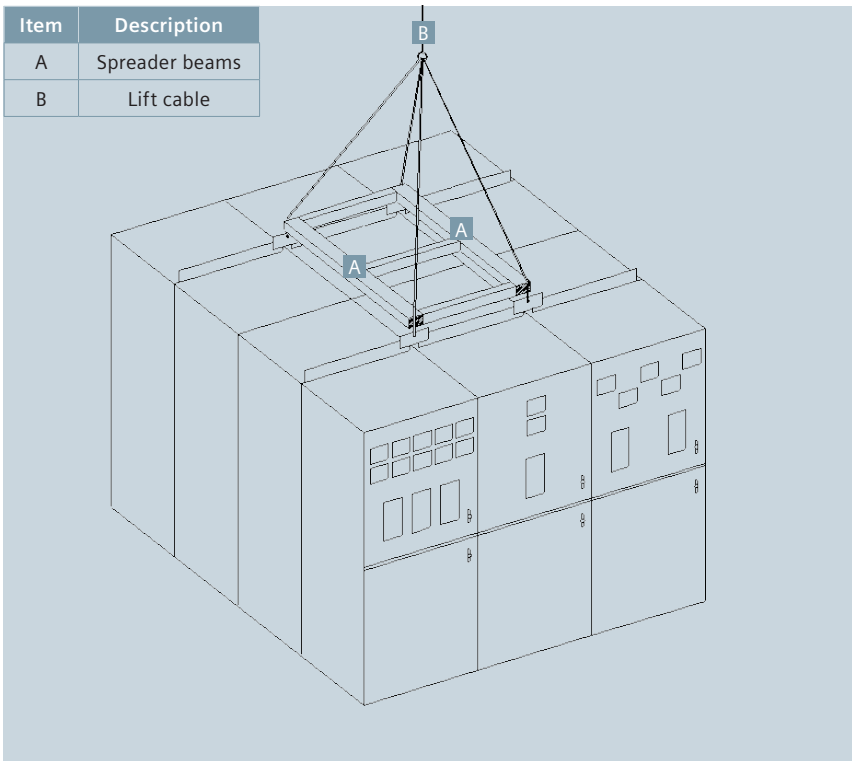

Item	Description
A	Spreader beams
B	Lift cable

Figure 2: Lifting indoor switchgear with crane

Lifting and moving

There are a number of methods that can be used in handling the switchgear that, when properly employed, will not damage the switchgear sections. The handling method used will be determined by conditions and available equipment at the installation site. Lifting with a crane is the preferred method of handling; however, overhead obstructions or low ceilings often dictate that other methods must be used. Rollers, jacks or fork lift trucks may be used prior to removal of wooden skids.

Each group of switchgear has provisions for attaching lifting equipment. Though the lift points vary in location on indoor, Shelter-Clad outdoor and non-walk-in designs, all are designed for use with a crane of adequate height and capacity. To estimate the maximum required crane capacity, multiply the number of sections to be lifted by 6,000 lbs (2,750 kg). A drawing pocket (or holder) is provided on each lineup of switchgear. This drawing pocket includes a general arrangement drawing of the switchgear lineup, plus a drawing with installation and handling instructions for the equipment. The drawing pocket is normally located at the left end of the lineup. Review this information carefully before moving the equipment.

Indoor switchgear

Before removing the protective packing materials, indoor equipment may be moved by crane with lift cables attached through the packaging to the lifting bars on the top of the switchgear. If crane facilities are unavailable, or if tight spaces prevent use of a crane, rollers under the skids may be used.

⚠ WARNING

Heavy weight.

Can result in death, serious injury or property damage.

Observe all handling instructions in this instruction manual to prevent tipping or dropping of equipment.

Lifting indoor switchgear with crane

Recommended lifting of indoor switchgear is by means of lifting cables connected to an overhead crane. The lifting cables should be connected to the eyes in the top lifting bars using properly rated shackles. One set of lifting bars is located near the front of the switchgear, while another set of lift bars is located closer to the middle of the switchgear, as illustrated in Figure 2: Lifting indoor switchgear with crane on page 10. A crane with sufficient height should be used so the load angle (from horizontal) on the lifting cables will be at least 45 degrees when viewed from the front or the rear. A lesser angle could cause the equipment to be damaged. The lifting cables must have spreaders from front-to-rear and side-to-side to prevent twisting the lift bars.

Moving switchgear in obstructed areas without a crane

Within buildings and obstructed areas, where a crane cannot be used, move switchgear with rollers, cribbing, jacks and other such equipment as may be required to meet the situation. Forklift trucks should be used with discretion as improper lift points could cause extreme damage to equipment. For this reason, **use of a forklift truck to handle or move switchgear is not recommended.**

Jacks may be used to lift switchgear that is properly supported by sturdy timbers.

To prevent distortion of the cubicles, rollers and cribbing of equal height must be used in sufficient number to evenly distribute the load.

Figure 3: Moving switchgear with jacks and rollers shows a method of using jacks on indoor switchgear to facilitate the use of rollers under the shipping skid. Care must be used to prevent damage to instruments, protective relays and devices, and to maintain the stability of the timbers.

Remove rollers and lower the switchgear carefully. Leave wooden skids (when provided) in place during moving operation until final location is reached.

Figure 4: Moving switchgear in obstructed areas without crane-final positioning shows a method of moving the switchgear into the final position after it has been moved near to the final position using another method.

Figure 3: Moving switchgear with jacks and rollers

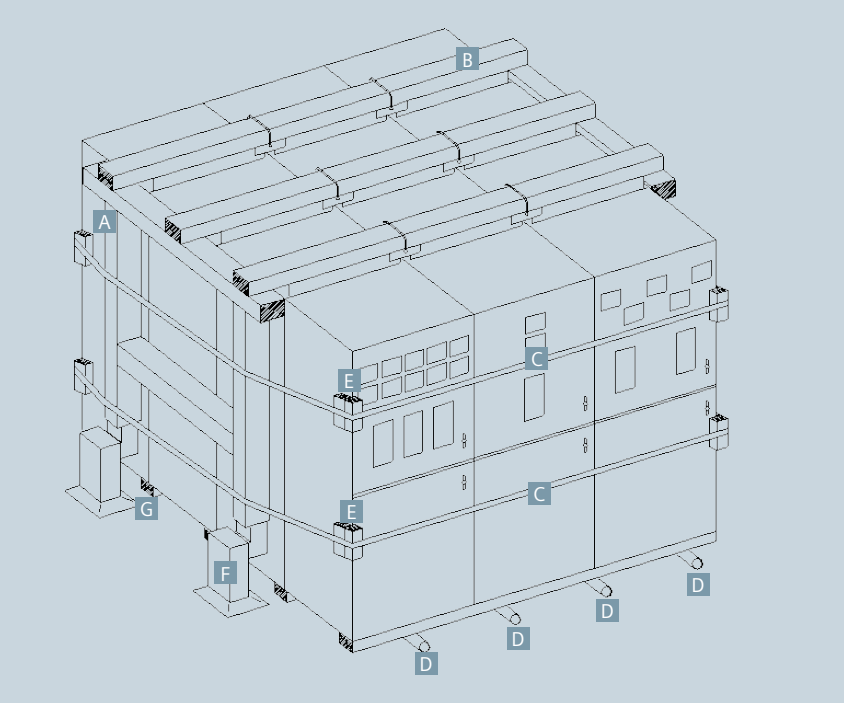

Item	Description	Item	Description
A	Jack beam	B	Lift beam
C	Banding	D	Rollers (under support timber)
E	Provide suitable protection for all corners	F	Jack
G	Support timber (between switchgear and rollers)		

Figure 4: Moving switchgear in obstructed areas without crane-final positioning

Item	Description
A	Previously positioned switchgear

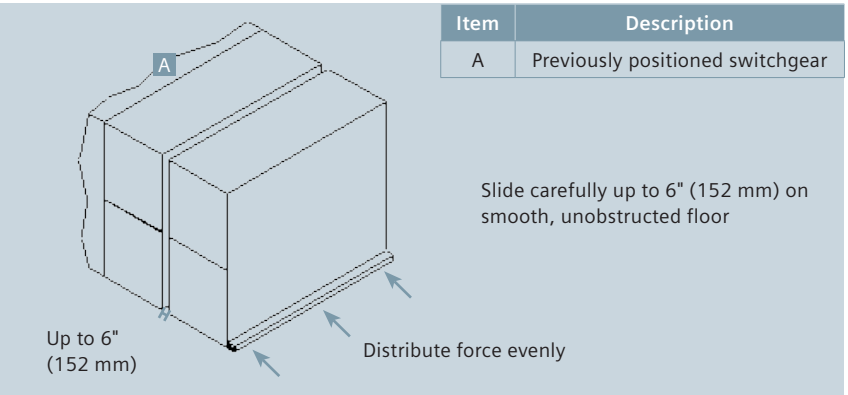

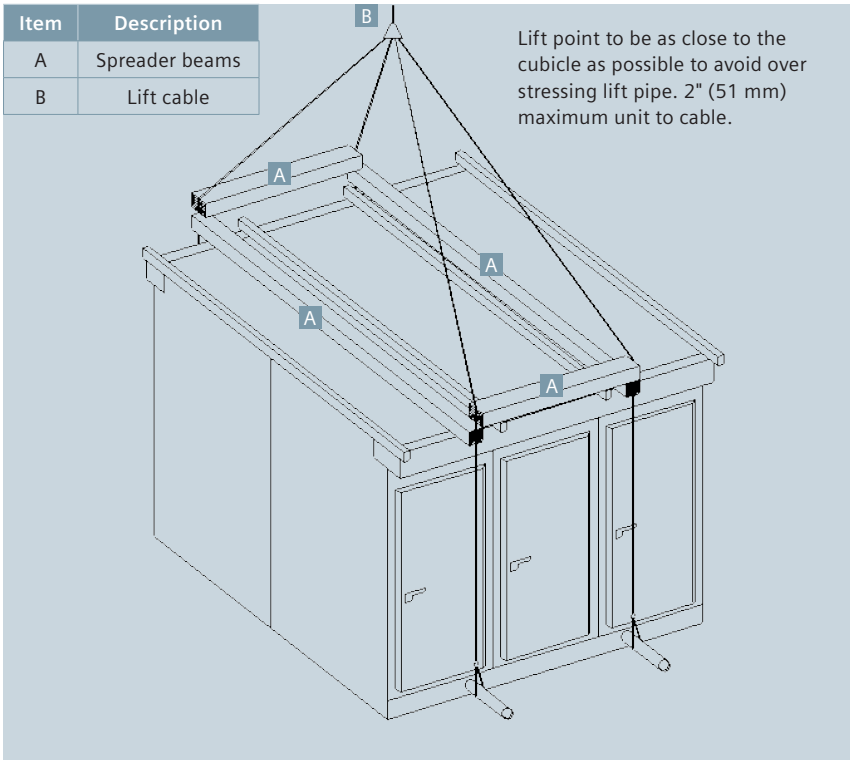

Figure 5: Lifting outdoor switchgear with crane

Lifting outdoor switchgear with crane

The method of lifting outdoor equipment is shown in Figure 5: Lifting outdoor switchgear with crane. The load angles (from horizontal) on the lifting cables, as viewed from the front or rear, must be at least 45 degrees. A lesser angle could damage the equipment. The lifting cables must have spreaders front-to-back and side-to-side to protect the equipment.

The recommended lifting pipe size (Ref. ASTM A-53) is type XXS 4" (102 mm) nominal (4.5" (114 mm) actual) OD. The lifting pipe should be at least 24" (610 mm) longer than the depth of the switchgear and should include adequate means to prevent the lifting cables from slipping off of the lifting pipe during use.

Figure 6: Moving outdoor switchgear with jacks and rollers on page 12 shows a method of using jacks on outdoor switchgear to facilitate the use of rollers under the shipping skid. Care must be used with this method to prevent damage to the doors and to maintain stability of the timbers. Refer to page 11 for additional information.

Final movement of assembly

Proper final movement and connection of the assembly requires that several items be completed:

1. Preplan sequence of installation movements and connections.
2. Where equipment must be slid into final location, start with the left end shipping group and continue in sequence. Secondary conduits that stub-up above floor level may block sliding.
3. Protect equipment and external items (for example, instruments, protective relays, etc.) from damage during movement. Be sure to have smooth, unobstructed surfaces where the equipment is to be slid. Keep access openings clear.
4. Prepare for the connections across shipping splits before the equipment is moved into final position. Interunit bus supports and bus joint boots should be removed using side, rear and front access options as required. Note the mounting position and orientation and save hardware for use in reinstallation.
5. Thread coiled wires across shipping splits into interunit wire trough prior to moving equipment into its final position.
6. Where top lift capability is available, shipping pallets and other packaging materials may be removed before the last move into the final position.

7. Where top lift capability is not available, protect the switchgear bottom with support timbers and move with jacks and rollers just to the side of its final position. Remove rollers, shipping pallets and other packaging materials and remove jacking facilities. Clear any obstructions. The equipment may be slid sideways up to 6" (152 mm) to join the shipping split. Any sliding force must be carefully applied across the bottom 4" (102 mm) of the switchgear side with proper cribbing to fully distribute the force across the full depth of side (refer to Figure 4: Moving switchgear in obstructed areas without crane-final positioning on page 11).
8. Refer to "Installation" section beginning on page 15 for additional important information.

Storage: indoor switchgear

When switchgear is not to be installed immediately, it should be unpacked, inspected within 15 days of receipt and stored in a clean dry location. Indoor switchgear is neither weather-resistant nor drip-resistant. Therefore, it should be stored indoors. If it is to be kept in a humid or unheated area, provide an adequate covering and place a heat source of approximately 500 watts output within each vertical section to prevent condensation. Space heaters are not standard equipment on indoor switchgear. Lubricate any moving parts, such as hinges, shutters, etc., if stored for an extended period of time. When batteries are supplied, connect them to a charger.

Item	Description	Item	Description
A	Lift pipe	C	Cable loop or jack hook
B	Rollers	D	Jack

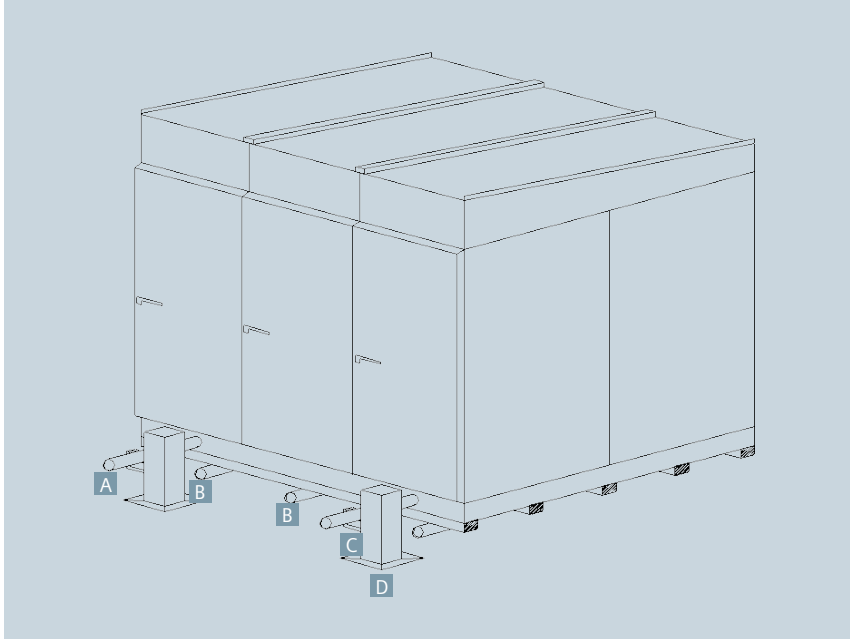

Figure 6: Moving outdoor switchgear with jacks and rollers

Storage: Shelter-Clad outdoor switchgear

When it is necessary to store Shelter-Clad outdoor equipment in a location exposing it to the weather or in a humid location, energize the space heaters provided within the sections and make certain that louvers and vents are uncovered to allow air to circulate. If at all possible, erect the aisle section and install the switchgear at the permanent location even though it may be some time before the equipment is used. If the equipment cannot be erected at the permanent location immediately, cover shipping splits to protect from the elements.

Regardless of which method of storage is used, remove the aisle wall from in front of instrument panels to gain access to the space heater circuit so that heaters can be energized. Refer to the wiring diagram drawing for space heater circuit connections. Replace the aisle wall and seal from the elements or cover for protection from the weather. Connect batteries (if provided) to a charger. Lubricate hinges, shutters and other moving parts.

Storage: non-walk-in outdoor switchgear

When it is necessary to store non-walk-in outdoor switchgear in an area exposed to the weather or under humid conditions, energize the space heaters provided and make certain that louvers and vents are uncovered to allow air to circulate. If at all possible, erect the switchgear at the permanent location even though it may be some time before the equipment is used. If the equipment cannot be erected at the permanent location immediately, cover shipping splits to protect from the elements.

Access to the heater circuit is gained by opening the door to the instrument panel compartment. Refer to the wiring diagram drawing for space heater circuit connections. Connect batteries (if provided) to a charger. Lubricate hinges, shutters and other moving parts.

Storage: type 38-3AH3 vacuum circuit breakers, ground and test devices and lift truck

Vacuum circuit breakers and ground and test devices, if not installed in their respective switchgear compartments, must be stored indoors. Outdoor storage of circuit breakers (other than inside their respective switchgear compartments) is NOT RECOMMENDED. Refer to type 38-3AH3 instruction manual E50001-F710-A238-X-XXXX for information on storage of circuit breakers.

If furnished, the lift truck for handling circuit breakers should be stored indoors. The lifting mechanism may be damaged by extended outdoor storage. For short-term (30 days or less) storage, the lift truck may be stored outdoors, provided that it is adequately covered to protect it from the weather. Lubricate lifting mechanism sliding or rolling elements.

Installation

Preparation for installation

Prior to installation of switchgear, study this instruction manual and the switchgear drawings, such as general arrangement, three-line diagram, schematic diagrams, wiring diagrams, installation instruction drawing, panel arrangement and panel arrangement bill of material, nameplate engraving list and accessories drawing. Special attention should be given to the foundation information contained in this instruction manual as well as the information provided on the equipment drawings. Be sure that the foundation conforms to the requirements described in this instruction manual and the general arrangement drawing.

Foundation: general requirements

Prior to installation of the switchgear, careful design, planning and construction of the foundation or base on which the switchgear will rest must be made. A thorough analysis and careful construction may alleviate many problems at the time of installation and during operation. It is important that a true and level surface be provided, capable of supporting the weight of the switchgear and other related equipment.

If the switchgear cannot be lowered over conduits because of headroom or other restrictions, conduit couplings may be grouted in flush with foundation, and conduit nipples added after the switchgear is in place.

Conduits should be capped during construction to prevent entry of dirt, moisture and vermin.

All sill channels, bed plates, shims and anchoring hardware are furnished by purchaser unless covered by contract.

Important: Dimensions shown in Figures 7-10 are for illustration only and **not for construction.**

Use certified arrangement drawings for the specific project for construction purposes.

Indoor foundations

As it is difficult to obtain a true and level floor on a concrete slab, it is highly recommended that 4" (101.6 mm) (minimum) sill channels be grouted into the floor as shown in Figure 7: Anchoring indoor type GM38 switchgear on page 23. The surface of the sills should be slightly above floor level.

The surfaces of the sills must be level and in the same horizontal plane within 1/16" (1.6 mm). There should be no projection above this plane within the area covered by the switchgear. If the floor or sills do not meet this requirement, it will be necessary to use shims when installing the switchgear on the mounting surface.

Figure 7: Anchoring indoor type GM38 switchgear on page 23 illustrates the location for sill channels for anchoring indoor switchgear. Cubicles may be anchored to sills by use of 1/2" (12 mm) diameter anchor bolts, or welded in position.

Outdoor foundations

Whichever type of foundation is used (for example, concrete slab, sill channels, piers or pilings), it must have smooth and level surfaces. Surfaces supporting the switchgear must be in the same horizontal plane within 1/16" (1.6 mm). If these conditions are not met, it will be necessary to use shims when installing the switchgear.

For outdoor switchgear, support shall be provided at each end and at the side of every second cubicle and at shipping splits, so that the span between supports does not exceed 96" (2,438 mm). Refer to Figure 8: Anchoring outdoor type SGM38 Shelter-Clad single-aisle switchgear on page 24, Figure 9: Anchoring outdoor type SGM38 Shelter-Clad common-aisle switchgear on page 25 and Figure 10: Anchoring outdoor type OGM38 non-walk-in switchgear on page 26, and the switchgear general arrangement drawing for locations of support and anchoring points.

If pilings are used, the diameter is to be determined by purchaser. The pilings, however, should not be less than 12" (305 mm) diameter for sufficient contact, room for anchor bolts, and grouting in of bed plates (if used). All shipping splits must be properly supported.

Any conduits which are installed in concrete must be perpendicular to switchgear mounting surface. Conduits should extend a minimum of 8-1/2" (216 mm) to a maximum of 9" (229 mm) above mounting surface. This will allow the conduit to enter the cubicle and exclude entry of water and rodents.

Important: In the switchgear primary entrance area, steel reinforcing rods or mesh in concrete must not pass through the space shown on the general arrangement drawing, even though cored or bored holes in concrete may miss rods or mesh. A single phase of a system should not be encircled by ferrous metals.

Erecting cubicles

The proper erection method depends on whether the units are shipped as one complete group, or in two or more shipping sections. In any case, the general arrangement drawing will indicate the shipping groups, and their location within the lineup. Units are assembled in accordance with the general arrangement.

Before setting and erecting the cubicles, determine the correct location of each shipping group on the general arrangement drawing. Sweep the mounting surface to remove all dirt and debris.

Anchoring, leveling and assembling indoor switchgear

Indoor switchgear shipping groups are held in true alignment by bolts holding the vertical sections to each other.

The entire shipping group is to be anchored and leveled as a single element without loosening any hardware until entire shipping group is leveled and anchored.

1. The switchgear equipment was accurately aligned at the factory. This alignment ensures proper operation and fit of mating parts. Supporting surfaces for the switchgear at each anchoring bolt location must be level and in the same plane within 0.06" (1.6 mm). There must not be any projection above this plane within the area covered by the switchgear cubicles.

   If the floor or grouted sill channels do not meet this requirement, it will be necessary to shim in the following manner. The eight anchor bolt locations (refer to Figure 7: Anchoring indoor type GM38 switchgear on page 23) in each cubicle must freely rest in firm contact with the mounting support surfaces. There must not be any projection or obstruction in other areas that may distort the cubicle.

   Do not force cubicles in firm contact by drawing down anchoring bolts because such drastic means will distort the cubicles. Add 4" (102 mm) square shims adjacent to anchor bolts until firm contact is achieved. Check each anchor bolt location, eight per cubicle (refer to Figure 7: Anchoring indoor type GM38 switchgear on page 23).

2. Tighten anchor bolts or weld the switchgear to sills.

3. If the lineup consists of multiple groups, move the next group into position with the front of units in line and tight against the adjacent group. Do not bolt groups together at this time. Check that the cubicles are in firm contact with the foundation at each corner and anchor point and that bolt holes are in alignment. Add 4" (102 mm) square shims as necessary. Tighten the anchor bolts. Now, bolt groups together.

4. After installation is complete, the lifting bar between units must be removed and the unit lift bars pushed down inside the units. Note that bolts inside the units that clamp the lift bars in place must be loosened to allow movement of the lift bar.

Anchoring, leveling and assembling outdoor Shelter-Clad switchgear

In Shelter-Clad arrangements, the switchgear (as shipped) is true and in correct position relative to its support base. The formed floor sections are a permanent part of the switchgear and are not to be loosened or moved from position.

Verify the anchor bolt locations in the concrete and all points shown in the general arrangement plan view. Sweep the foundation to make certain it is free of pebbles and other debris. Check the general arrangement drawing for positioning of the switchgear and sequence of installation if arrangement consists of more than one shipping group.

Single-aisle Shelter-Clad cubicles are shipped with the aisle wall covering the circuit breaker drawout compartment. This wall may be removed before moving the switchgear into position on its foundation, if conduit clearances are in doubt or if the aisle is to be assembled immediately after leveling.

1. Remove seal material at top of aisle wall.
2. Unbolt, remove and scrap the 1-1/4" (32 mm) plate and 1-1/4" (32 mm)angle.
3. Support wall with crane or other means (allow approximately 350 lbs (159 kg) per unit) and remove the two angles at each end of the group that hold the aisle wall in place. These angles may now be scrapped. Carefully lay aside aisle wall until needed for aisle assembly.
4. Remove nuts from all anchor bolts, remove caps from all secondary conduit stubs and remove covers from secondary openings in cubicle floor plates. The arrangement may consist of a single complete shipping group or may be split into a number of shipping sections for a long lineup. Refer to the general arrangement drawing for instructions as to which shipping group should be installed first and in what sequence the remaining groups are to be installed. Move the first group into position as shown on the general arrangement drawing.
5. The switchgear equipment was accurately aligned at the factory. This alignment ensures proper operation and fit of mating parts. Supporting surfaces for the switchgear's 8" (203 mm) base must be level and in the same plane within 0.06" (1.6 mm). If concrete, grouted channels, pier supports, etc., do not meet this requirement or if there is any projection higher than the support points in line with the base, shims must be installed in the following manner to provide an equivalent true surface for switchgear support.

   Outdoor switchgear groups that have been assembled on an 8" (203 mm) base must be supported along this base at each end and at the side of every second cubicle and at shipping splits, so that the span between supports does not exceed 96" (2,438 mm). If shims are required, use 4" (102 mm) square strips placed between the bottom of the base and the foundation in the anchor bolt area where they will be clamped firmly in place. Do not force cubicle in firm contact by drawing down anchoring bolts as such drastic means will distort cubicles.
6. Add clamp washers and nuts to anchor bolts and tighten securely.
7. Check all circuit breaker compartments for free movement of the shutters.
8. Move the next group into position. The front edge of the cubicle base should be in line with those of the previously installed group. This will ensure a good fit with the aisle floor plates. Make certain that the end of the group being installed is tightly against the previously installed group. Repeat steps 5, 6 and 7 and install all shipping split hardware.

Assembly of single-aisle Shelter-Clad switchgear

Figure 11: Single-aisle type SGM38 field assembly on page 27 illustrates the assembly of single-aisle Shelter-Clad switchgear and Table 2: Single-aisle type SGM38 field assembly components on page 27 lists the standard components supplied. The item numbers in the table are used in all instructions pertaining to this procedure.

Assemble as follows:

1. Temporarily support the aisle wall assembly in its permanent position as shown in the general arrangement drawing.
2. Put roof covers in place to hold top of aisle wall in place. Do not tighten hardware.
3. Align the ends of the aisle wall, aisle channel and switchgear. Place floor plate in position between the switchgear and wall. Install each set next to the end position between the switchgear and the wall. With floor plate set tightly against the switchgear floor plates, bolt floor plates in position. Tighten anchor bolts to secure channel locations.
4. With roof cover hardware loose, plumb front wall and tighten attaching hardware.
5. Install all floor plates.
6. Caulk aisle walls.

Note: Place lift truck (if supplied) for upper cell fuse rollout trucks inside the aisle enclosure before installation of the last door assembly to the enclosure. The lift truck is wider and higher than the hinged aisle door opening, which prevents convenient entrance of the lift truck if the door assemblies are in place.

7. Set door assemblies in place. Bolt the door to the aisle wall and to the side plate of the cubicle.
8. Put all roof covers in place and bolt to the adjoining roof cover with 3/8" hardware.
9. Set roof channels over roof cover joints. Bolt to clips welded to roof with retainer nuts.
10. Drill cable cover to suit conduit installation. Bolt the cover in place.
11. Mount aisle conduit, switches, receptacle and wire to the junction boxes (refer to conduit arrangement drawing).
12. If equipment consists of more than one shipping group, caulk each vertical shipping split at the back of the switchgear with metal filler provided.

Assembly of single-aisle Shelter-Clad switchgear with work space

Figure 12: Single-aisle type SGM38 with work space field assembly on page 28 illustrates the assembly of single-aisle Shelter-Clad switchgear with an attached work space area and Table 3: Single-aisle type SGM38 with work space field assembly components on page 28 lists the standard components supplied. The item numbers in the table are used in all instructions pertaining to this procedure.

Assemble as follows:

1. Mount aisle end plate at the end opposite the work space.
2. Move aisle wall to its permanent location as indicated on the general arrangement drawing.
3. Mount the end plate and proceed.
4. Put the work space floor plate base in position as indicated.
5. Assemble aisle walls. Refer to general arrangement drawing for location of special panels for fans, etc. Apply caulk at the joints of the wall sections.
6. Bolt work space rear plates together in a manner similar to the aisle wall sections and then bolt to the switchgear unit.
7. Caulk at joints.

Note: Place lift truck (if supplied) for upper cell fuse rollout trucks inside the aisle enclosure before installation of the last door assembly to the enclosure. The lift truck is wider and higher than the hinged aisle door opening, which prevents convenient entrance of the lift truck if the door assemblies are in place.

8. Install end plate and attach to switchgear.
9. Install aisle floor plates in the same manner as for single-aisle layouts.
10. Install roof support from cubicles to end of work space area.
11. Put all roof decks in place and bolt to the top of the end plate and to the roof support. Leave hardware finger-tight until step 13 is complete.
12. Fasten roof decks together with 3/8" hardware.
13. Mount trim angle. Tighten all hardware.
14. Set roof channels over roof deck joints, bolt to clips welded to roof with retainer nuts.
15. Mount aisle conduit, switches, receptacle and wire to the junction boxes (refer to conduit arrangement drawing).
16. If equipment consists of more than one shipping group, caulk each vertical shipping split at the back of the switchgear with metal filler provided.

Assembly of common-aisle Shelter-Clad switchgear

Figure 13: Common-aisle type SGM38 field assembly on page 29 illustrates the assembly of common-aisle Shelter-Clad switchgear, and Table 4: Common-aisle type SGM38 field assembly components on page 29 lists the standard components supplied. The item numbers in the table are used in all instructions pertaining to this procedure.

Assemble as follows:

1. Install all floor plates.
2. Caulk at joints.

Note: Place lift truck (if supplied) for upper cell fuse rollout circuit breakers inside the aisle enclosure before installation of the last door assembly to the enclosure. The lift truck is wider and higher than the hinged aisle door opening, which prevents convenient entrance of the lift truck if the door assemblies are in place.

3. Raise door assemblies into place. Bolt doors to side plates of cubicles.
4. Mount aisle conduit, switches, receptacle and wire to the junction boxes. Refer to conduit arrangement drawing.
5. Place roof decks in position and fasten with bolts provided.
6. Fasten the roof decks together with 3/8" hardware.
7. Set channel-shaped covers over the joints of roof decks and bolt to clips welded to roof with retainer nuts.
8. Tighten all bolts to complete assembly.
9. Drill cable cover to suit conduit. Bolt the cover in place.
10. If equipment consists of more than one shipping group, caulk each vertical shipping split at the back of the switchgear with metal filler provided.

⚠ DANGER

Hazardous voltages and high speed moving parts.

Will cause death, serious injury or property damage.

Do not work on energized equipment. Always de-energize and ground the equipment before working on the equipment.

Expanding length of existing Shelter-Clad switchgear by addition of units

The new extended foundation, be it slab, pier or pilings, must be constructed in the same careful manner as described under "Outdoor foundations." The new foundation must be level and in the same plane within 0.06" (1.6 mm) as the existing foundation.

Certain items will be removed from the existing installation as described in the following instructions. Remove these items carefully and store them for remounting in the expanded setup.

1. Remove the channel-shaped covers over roof joints from both aisle and switchgear unit.
2. Remove the trim angle from the outer edge of the roof deck.
3. Remove the back plates to provide access to the hardware securing the end cover. Remove the end cover with associated parts and save for later re-installation.
4. Disconnect aisle conduit.
5. Remove all hardware securing the side plate to the switchgear frame and hardware securing aisle end plate to the aisle wall. It may be necessary to tap a knife blade down the vertical seam between the aisle wall and the end plate to cut the caulking. Remove the side plates from both switchgear and aisle.
6. The lineup is now ready for installation of the new unit or units. If the foundation was carefully constructed there should be no problems with lineup of the base or matching the level of existing equipment.
7. With new units in true alignment with existing equipment and properly leveled, bolt units together with 1/2" hardware provided.
8. Run aisle wiring from the terminal block in existing end units, through the barrier and header to the junction box area.
9. Mount other parts removed from existing equipment and caulk all external seams with metal filler.
10. Make all electrical connections as instructed in instruction manual or shown on drawings.
11. Caulk each vertical split at back of switchgear between the existing equipment and the new addition with metal filler. Replace bus compartment barriers and install back plates.

Anchoring, leveling and assembling conventional outdoor non-walk-in switchgear

In conventional outdoor non-walk-in arrangements the switchgear (as shipped) is true and in correct position relative to its support base. The formed floor base sections are a permanent part of the switchgear, and are not to be loosened or moved from position.

Verify the anchor bolt locations in the concrete and all points shown in the general arrangement plan view. Sweep the foundation to make certain it is free of pebbles and other debris. Check the general arrangement drawing for positioning of the switchgear and sequence of installation if arrangement consists of more than one shipping group.

1. Remove nuts from all anchor bolts, remove caps from all secondary conduit stubs and remove covers from secondary openings in cubicle floor plates.

   The arrangement may consist of a single complete shipping group, or may be split into a number of shipping sections for a long lineup. Refer to the general arrangement drawing for instructions as to which shipping group should be installed first, and in what sequence the remaining groups are to be installed. Move the first group into position as shown on the general arrangement drawing.

2. The switchgear equipment was accurately aligned at the factory. This care insures proper operation and fit of mating parts. Supporting surfaces for the switchgear's 8" (203 mm) base must be level and in the same plane within 0.06" (1.6 mm). If concrete, grouted channels, pier supports, etc., do not meet this requirement, or if there is any projection higher than the support points in line with the base, shims must be installed in the following manner to provide an equivalent true surface for switchgear support.

   Outdoor switchgear groups which have been assembled on an 8" (203 mm) base must be supported along this base at each end and at the side of every second cubicle and at shipping splits, so that the span between supports does not exceed 96" (2,437 mm). If shims are required, use 4" (102 mm) square strips placed between the bottom of the base and the foundation, in the anchor bolt area where they will be clamped firmly in place. Do not force cubicle in firm contact by drawing down anchoring bolts as such drastic means will distort cubicles.

3. Add clamp washers and nuts to anchor bolts and tighten securely.

4. Check all circuit breaker compartments for free movement of the shutters.

5. Move the next group into position. The front edge of the cubicle base should be in line with those of the previously installed group. This will insure a good fit with the aisle floor plates. Make certain that the end of the group being installed is tightly against the previously installed group. Repeat steps 3, 4 and 5 and install all shipping split hardware.

Expanding length of existing conventional outdoor non-walk-in switchgear by addition of units

Expanding the length of existing conventional outdoor switchgear by field addition of units should be handled in the same manner as Shelter-Clad switchgear with the exception that there is no aisle with which to be concerned. Follow the instructions given under expanding length of existing Shelter-Clad switchgear by addition of units on pages 20 to 21. However, note that only roof channels, bus compartment barriers and end plates need to be removed on conventional switchgear.

Figure 7: Anchoring indoor type GM38 switchgear

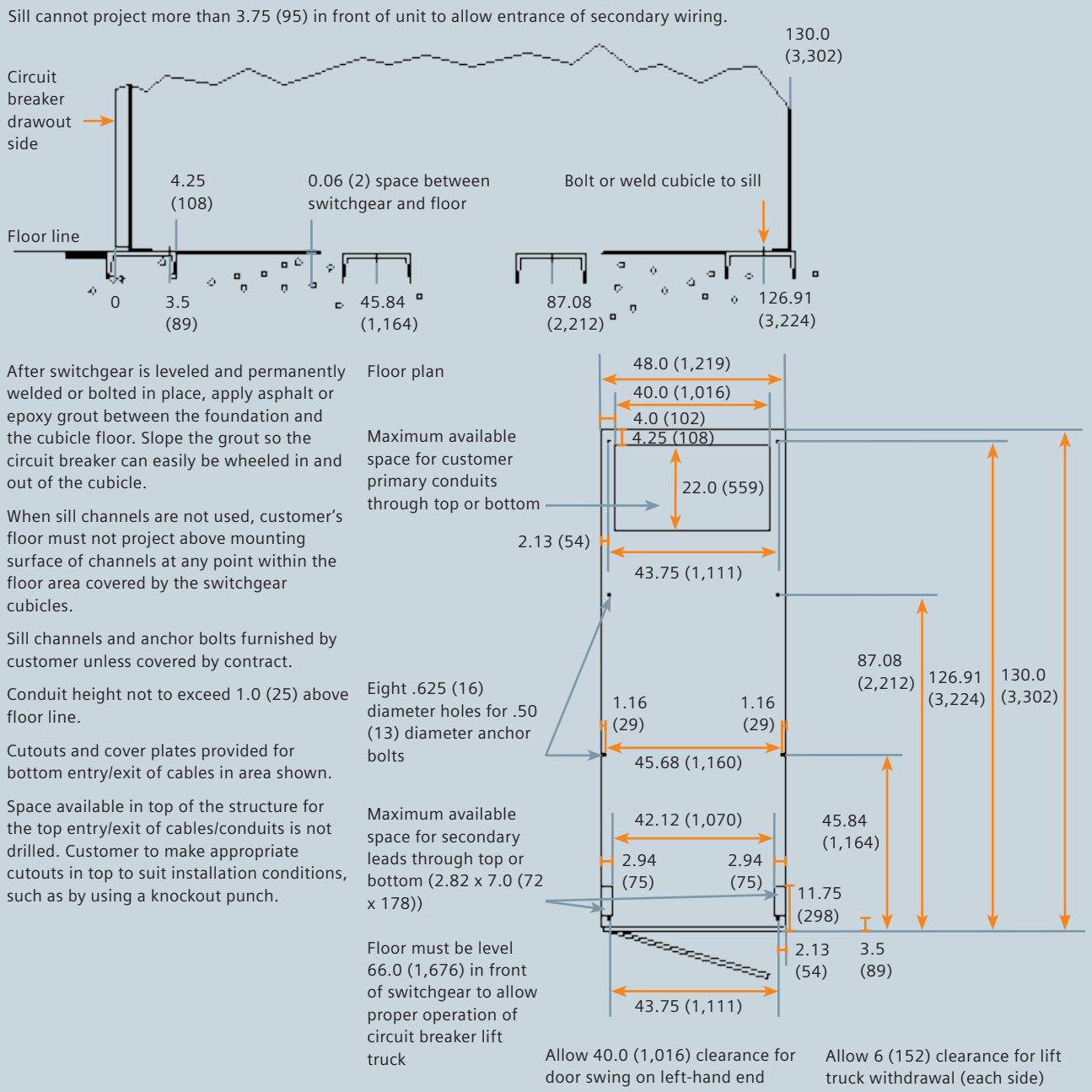

After switchgear is leveled and permanently welded or bolted in place, apply asphalt or epoxy grout between the foundation and the cubicle floor. Slope the grout so the circuit breaker can easily be wheeled in and out of the cubicle.

When sill channels are not used, customer's floor must not project above mounting surface of channels at any point within the floor area covered by the switchgear cubicles.

Sill channels and anchor bolts furnished by customer unless covered by contract.

Conduit height not to exceed 1.0 (25) above floor line.

Cutouts and cover plates provided for bottom entry/exit of cables in area shown.

Space available in top of the structure for the top entry/exit of cables/conduits is not drilled. Customer to make appropriate cutouts in top to suit installation conditions, such as by using a knockout punch.

Dimensions in inches (mm)

Allow 96.0 (2,438) (recommended) for circuit breaker or fuse truck withdrawal. Minimum drawout space for circuit breaker or fuse truck at floor level is 80.0" (2,032).

Figure 8: Anchoring outdoor type SGM38 Shelter-Clad single-aisle switchgear

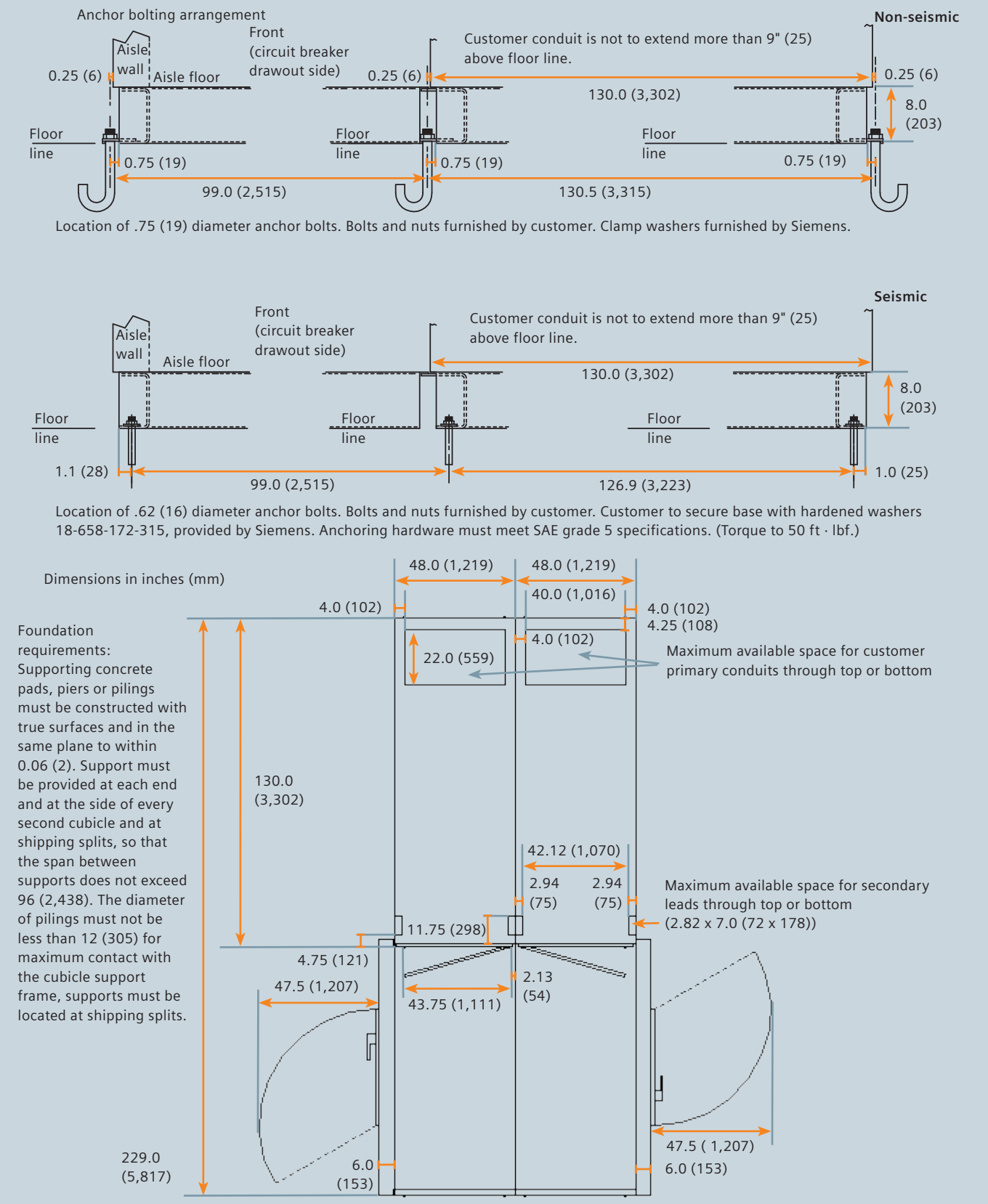

Figure 9: Anchoring outdoor type SGM38 Shelter-Clad common-aisle switchgear

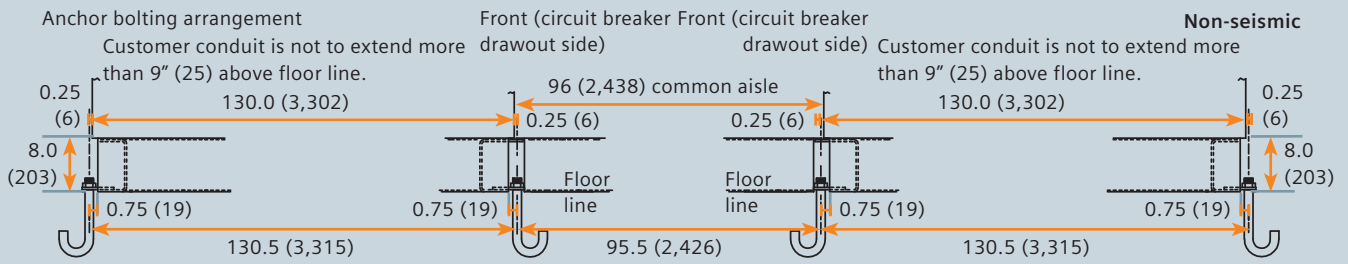

Location of .75 (19) diameter anchor bolts. Bolts and nuts furnished by customer. Clamp washers furnished by Siemens.

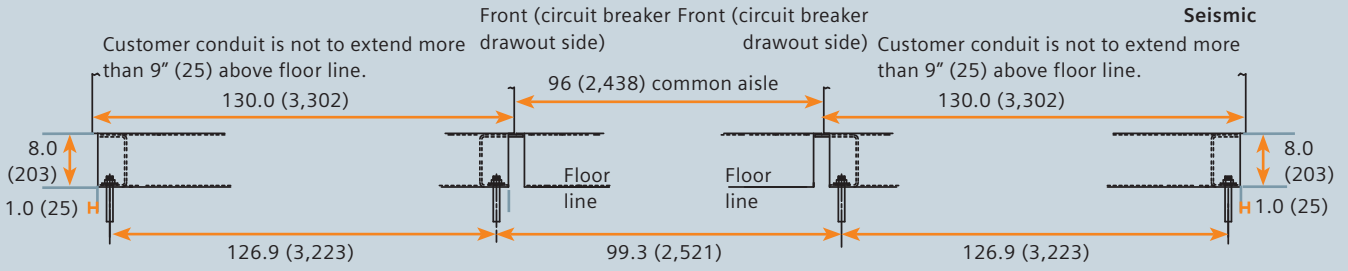

Location of .62 (16) diameter anchor holes. Bolts and nuts furnished by customer. Customer to secure base with hardened washers 18-658-172-315, provided by Siemens. Anchoring hardware must meet SAE grade 5 specifications. (Torque to 50 ft · lbf.)

Dimensions in inches (mm)

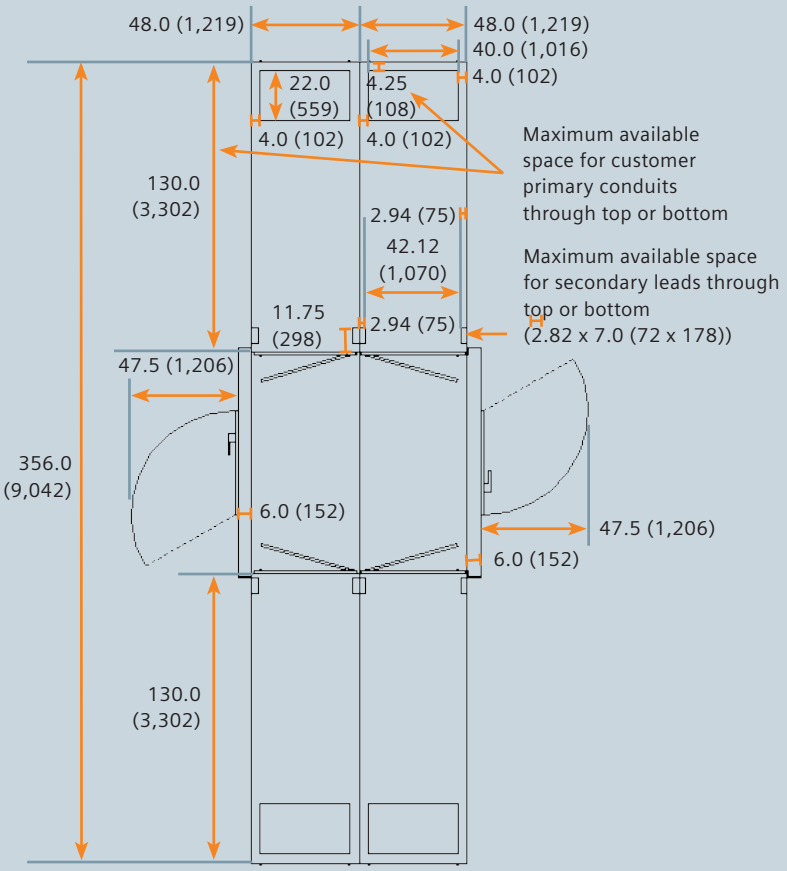

Figure 10: Anchoring outdoor type OGM38 non-walk-in switchgear

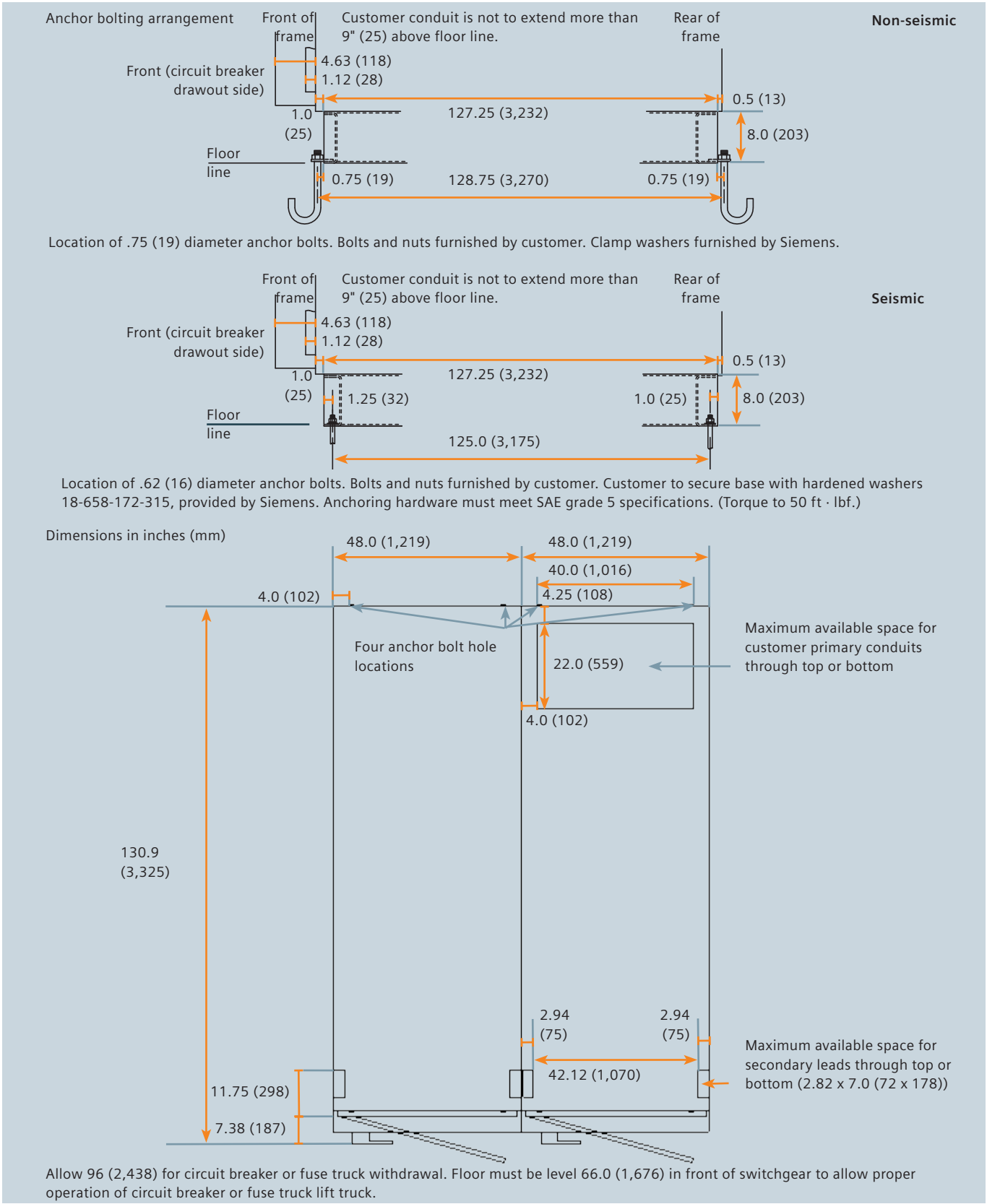

Figure 11: Single-aisle type SGM38 field assembly

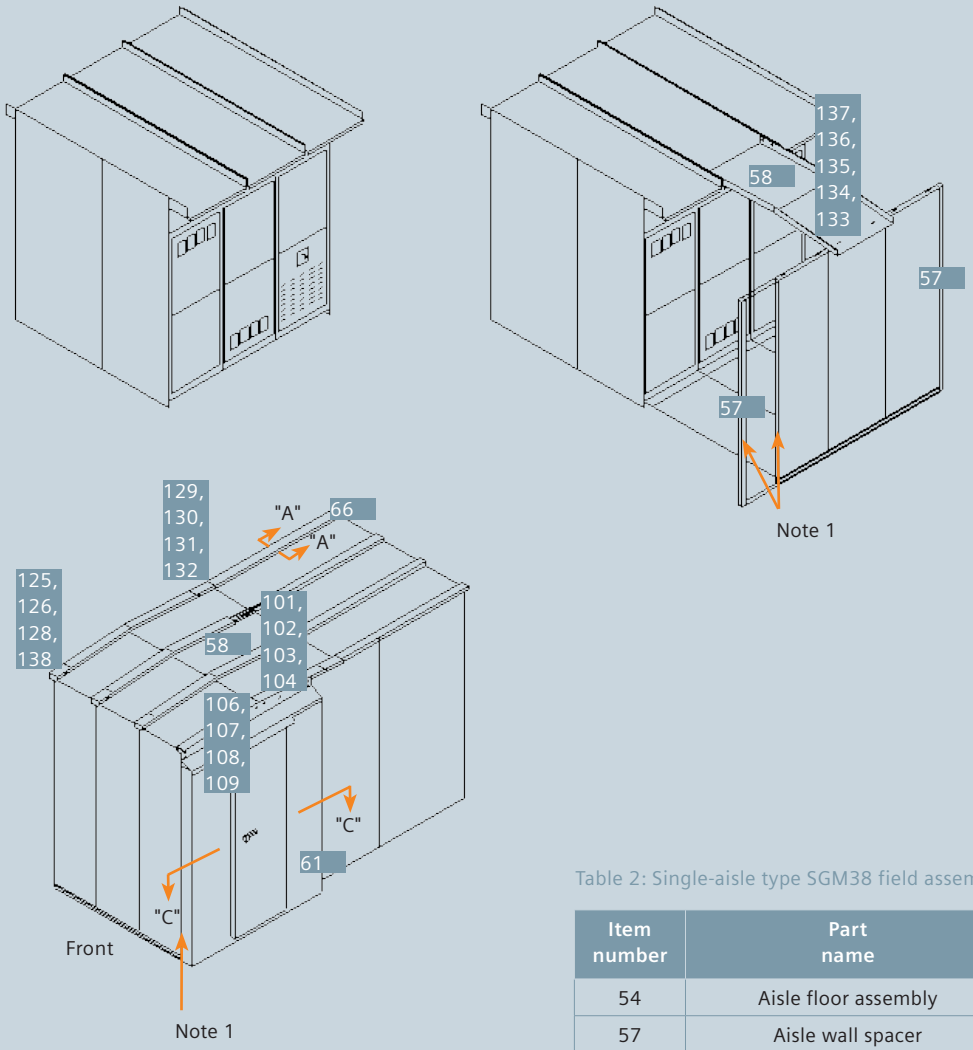

Notes:

1. Apply caulking 15-172-454-001 from top to bottom.
2. Refer to Figure 14: Sections and roof installation details on page 30.

Table 2: Single-aisle type SGM38 field assembly components

Item number	Part name	Part number
54	Aisle floor assembly	18-752-199-501
57	Aisle wall spacer	18-658-147-383
58	Aisle roof	18-818-456-501
60	Aisle roof spacer	18-658-106-037
61	Housing assembly 6" (152 mm)	18-487-190-501
63	Aisle roof trim angle	18-752-169-001
64	Aisle roof cap	18-752-168-001
65	Aisle roof end cap	18-740-698-118
66	Equipment roof cap	18-752-123-501
101-113	Aisle end hardware	18-658-583-823
125-138	Aisle roof and floor hardware	18-658-583-824

Figure 12: Single-aisle type SGM38 with work space field assembly

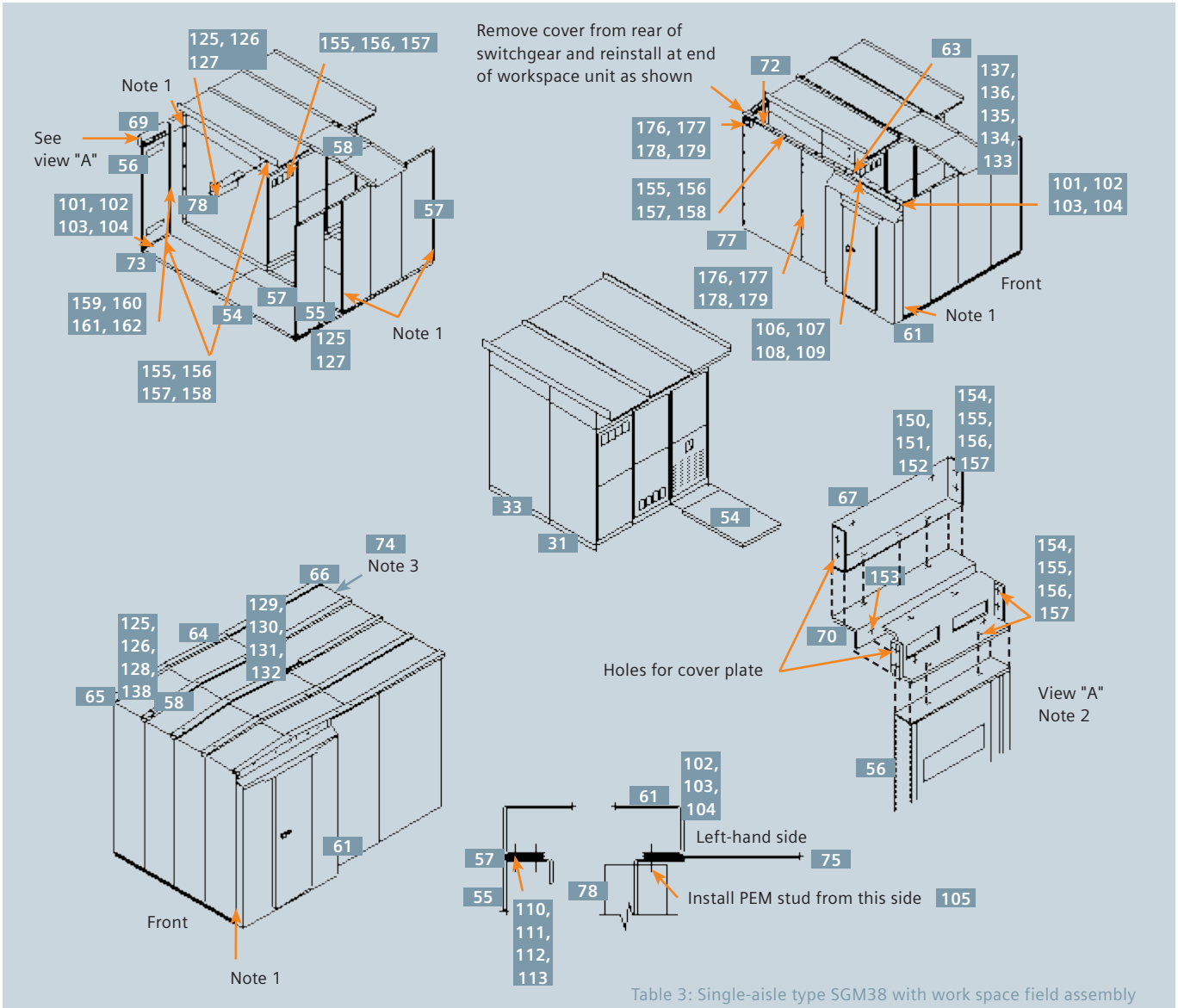

Notes:

1. Apply caulking 15-172-454-001 from top to bottom.
2. Install filter (item 114) between items 67 and 69.
3. Refer to Figure 14: Sections and roof installation details on page 30.

Table 3: Single-aisle type SGM38 with work space field assembly components

Item number	Part name	Part number
54	Aisle floor assembly	18-752-170-501
58	Aisle roof	18-818-456-501
61	Housing assembly 6" (152 mm)	18-487-190-501
63	Aisle roof trim angle	18-752-169-001
64	Aisle roof cap	18-752-168-001
66	Equipment roof cap	18-752-123-501
101-113	Aisle end hardware	18-658-583-823
125-138	Aisle roof and floor hardware	18-658-583-824

Figure 13: Common-aisle type SGM38 field assembly

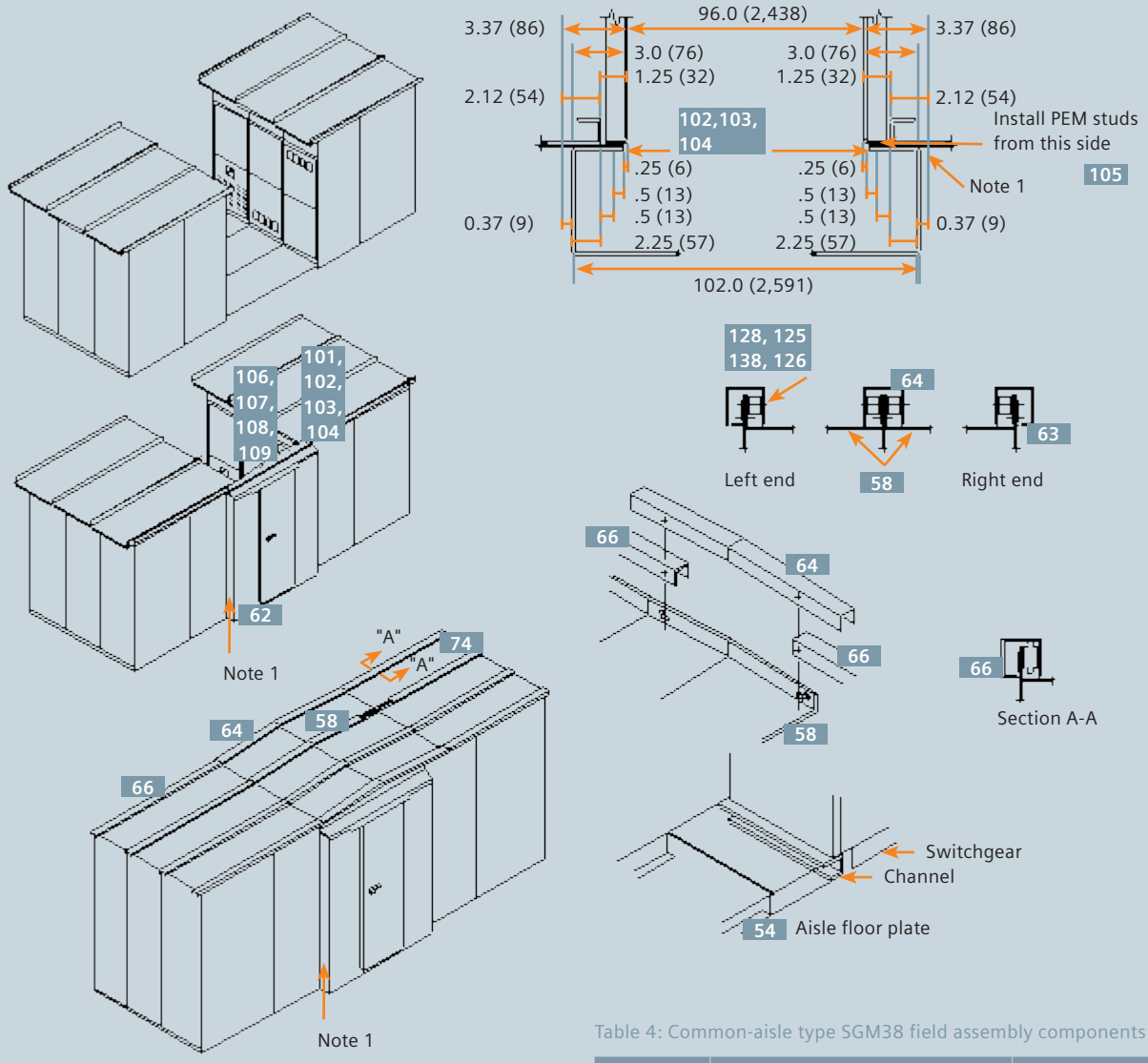

Notes:

1. Apply caulking 15-172-454-001 from top to bottom.
2. Refer to Figure 14: Sections and roof installation details on page 30.

Table 4: Common-aisle type SGM38 field assembly components

Item number	Part name	Part number
54	Aisle floor assembly	18-752-170-501
58	Aisle roof	18-818-456-501
61	Housing assembly 6" (152 mm)	18-487-190-501
63	Aisle roof trim angle	18-752-169-001
64	Aisle roof cap	18-752-168-001
66	Equipment roof cap	18-752-123-501
101-113	Aisle end hardware	18-658-583-823
125-138	Aisle roof and floor hardware	18-658-583-824

Figure 14: Sections and roof installation details

Dimensions in inches (mm)

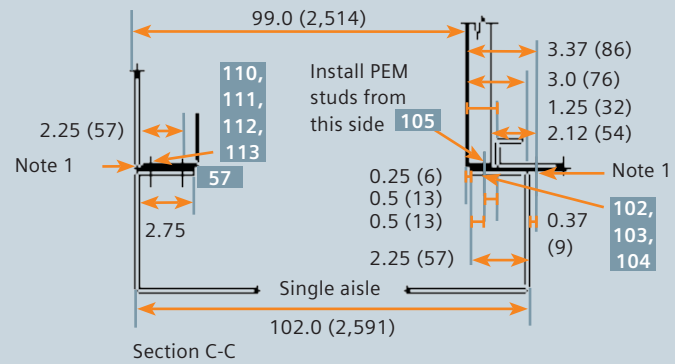

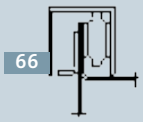

Section A-A

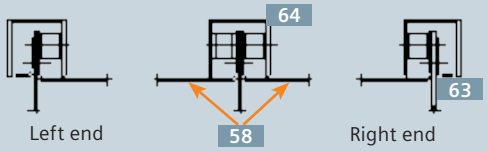

Left end

Right end

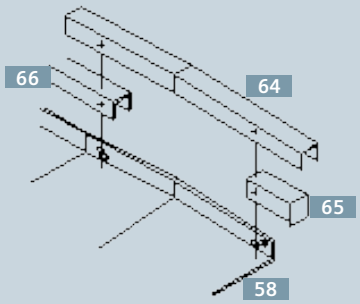

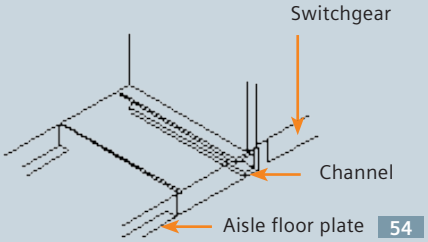

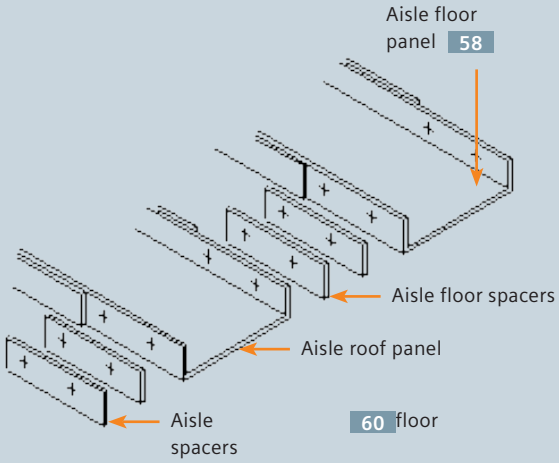

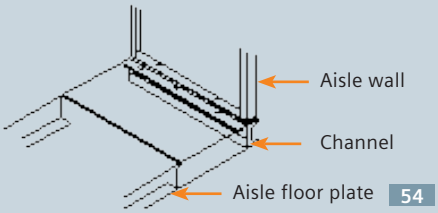

Note:
1. Apply caulking 15-172-454-001 from top to bottom.

Electrical connections

⚠ DANGER

Hazardous voltages.

Will cause death, serious injury or property damage.

Do not contact energized conductors.

Always de-energize and ground high-voltage conductors before working on or near them.

Bus bar

Bus bar is furnished for connection between many of the high-voltage items within the switchgear enclosure, such as main bus, circuit breakers and pads for cable terminations. Cables are provided for connection to primary disconnect assemblies for voltage and control power transformers, and for connection to surge arresters.

Standard bus bar material is copper with silver-plated joints for electrical connections. Bus bars are insulated with heat-shrink insulation. Bus bar joints are insulated with molded insulation boots (where a boot is available) or are taped.

Additional insulation is provided by clearance through air and bus supports. In some locations, standoff insulators are used. Epoxy insulator rings mounted in glass polyester supports, porcelain standoff insulators and/or epoxy primary disconnect bushings are also used.

Bus joints

When a switchgear lineup is split for shipping purposes, the primary bus and ground bus connections must be made when installing the switchgear. These bolted connections are relatively simple to make. Refer to Figure 15: Main bus joints-circuit breaker section and Figure 16: Main bus joints-auxiliary section on page 32 and these instructions:

The bus bars and connection hardware for joining the groups together are normally shipped mounted on a bracket in one of the units involved in the connection. When this is not possible, the connection bars and hardware will be shipped in a separate package, and will be listed on the accessories drawing. This drawing is listed on the reference drawing list.

Access to the main bus from the cable termination area is achieved by removing the main bus compartment barrier that separates the main bus from the cable area (refer to Figure 24: Typical cable termination-bottom exit cables on page 38). For some arrangements it may be necessary to remove items between the main bus barriers and the rear of the unit in order to gain full access. After completion of the bus assembly and insulation, these items should be reassembled in reverse sequence.

Figure 15: Main bus joints-circuit breaker section

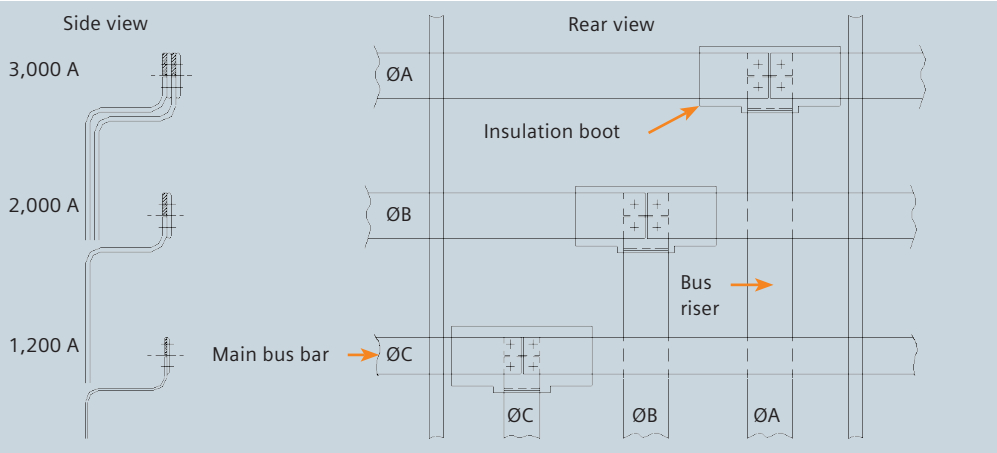

Figure 16: Main bus joints-auxiliary section

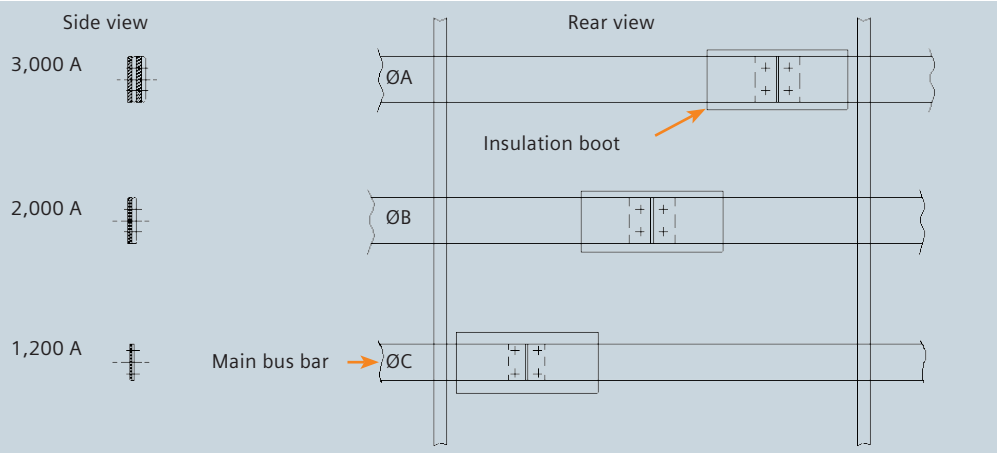

1. Molded plastic insulation boots for bus bar joints are normally shipped factory installed at shipping splits. Note their location and orientation, so they may be properly reinstalled after the joint is bolted together. Carefully remove and save the nylon hardware and the boot.
2. All surfaces must be free of dust, dirt or other foreign material. Do not use any abrasive cleaner on plated contact surfaces. Cleaning is normally not necessary and should not be done unless parts are badly tarnished. If cleaning is necessary, use a mild cleaner and thoroughly rinse the parts to remove all residue. Keep cleaning agent off insulation.
3. Before assembling any bus bar joint, check that the bus bar is inserted through bus supports (when required) and interunit bus supports. Observe the relationship of the bus bar to the circuit breaker riser (for example, whether bus bar is in front of, or behind, the circuit breaker riser). Maintain this relationship when connecting bus bars. Spacers are required in some bus joint connections.
4. Assemble all joints with the parts dry. Do not use any grease or "no-oxide" product.

Note: All main bus hardware furnished is plated high strength steel. Cap screws are 1/2"-13 SAE grade 5. Do not substitute with smaller or lower grade hardware than supplied.

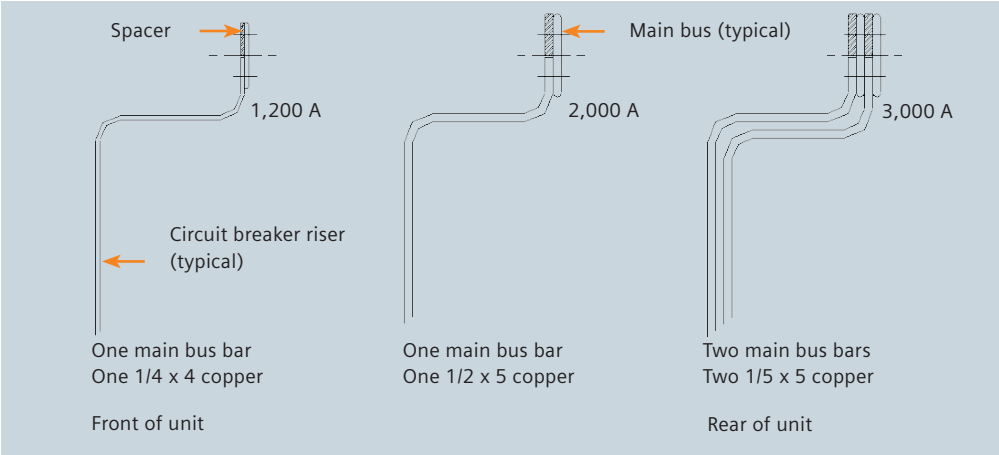

Figure 17: Main bus joints connection configurations

5. Use proper hardware. Heavy flat washers are used on both sides of the bus bar joint under the cap screw head and as well as under the nut and lock washer. These washers insure an evenly distributed force around each bolt, producing a low-resistance joint. Proper torque value produces a joint of adequate pressure without cold flow (refer to Figure 18: Bus bar joint assembly).
6. Assemble all joints shown in Figures 15 through 18. Install all hardware the same way that factory bus connections were installed. Hardware must be aligned properly or molded insulators may not fit over the joints.
   A. Place a flat washer on the cap screw (bolt) and insert the cap screw through the bus joint towards rear of unit.
   B. Place a flat washer against the bus bar with a lock washer between the flat washer and the nut.
   C. Spacers are required at certain bus joints to insure the cross sectional area of the joint. The conditions where these spacers are required vary with the type of bus joint (refer to Figure 17: Main bus joints connection configurations).
7. Torque the 1/2"-13 SAE Grade No. 5 cap screws to 50-75 lb · ft (68-102 Nm) torque. (If special hardware is required by an order, other torque values will be supplied with field assembly drawings.)
8. Install insulation boots or tape joints where required per instructions in following sections.
9. Connect ground bus (refer to Figure 28: Ground bus connection on page 39). Insert bar in side wall opening to overlap the ground bus in adjacent cubicles.
10. Torque the 3/8-16 SAE Grade 5 cap screw used in the ground bus to 25-40 lb · ft (34-54 Nm).

Bus insulation

Bus and connections are insulated in metal-clad switchgear as part of a coordinated insulation system. Air or creep distance plus bus insulation combines to provide the needed insulation level. **BUS INSULATION IS NOT DESIGNED TO PREVENT SHOCK.**

Heat shrink insulation is normally furnished on the bus bars. Bus joints are normally insulated with boots. Taping is also used for bus joint insulation.

Figure 18: Bus bar joint assembly

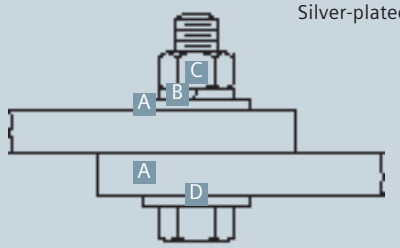

Item	Description
A	Flat washer
B	Lock washer
C	Nut
D	Cap screw

⚠ DANGER

Hazardous voltage.

Will cause death, serious injury and property damage.

Do not contact energized conductors.

De-energize and ground high-voltage conductors before working on or near them.

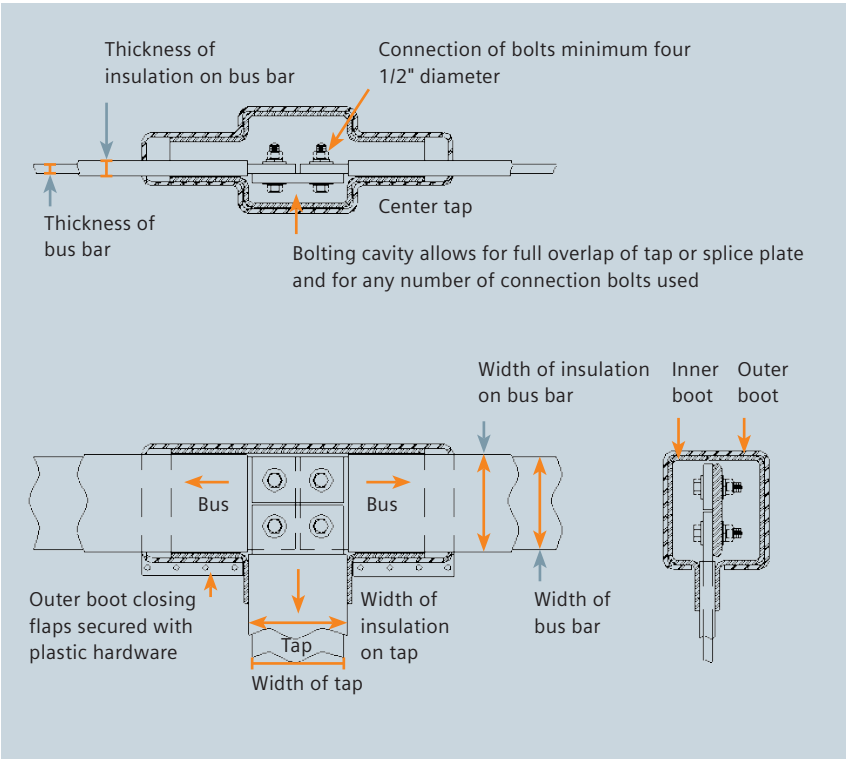

Figure 19: Typical installation of insulating boot

The ANSI/IEEE requirements for bus insulation in metal-clad switchgear are contained in ANSI/IEEE C37.20.2 clause 7.9, which reads as follows:

"This insulating covering is a requirement of metal-clad switchgear and is provided to minimize the possibility of communicating faults and to prevent the development of bus faults that would result if foreign objects momentarily contacted bare bus. This insulating covering is usually only a part of the primary insulation system, and in such cases the outer surface of this insulating covering will not be at ground potential. It should not be assumed, therefore, that personnel can contact this insulating covering with complete safety."

Bus-joint insulation boots

Standard and repetitive bus bar joints are normally provided with insulation boots installed at the factory (refer to Figure 19: Typical installation of insulating boot). After they are completed in the field, bus bar joints at shipping splits must be insulated as part of the total insulation system. Normally boots are provided for field completed shipping split joints and are shipped in the location where they will finally be installed (refer to Figure 20: Bus bar joint assembly).

Before removal of the boots to complete the joint, observe the location and orientation of the boots and hardware. This should make reinstallation easier.

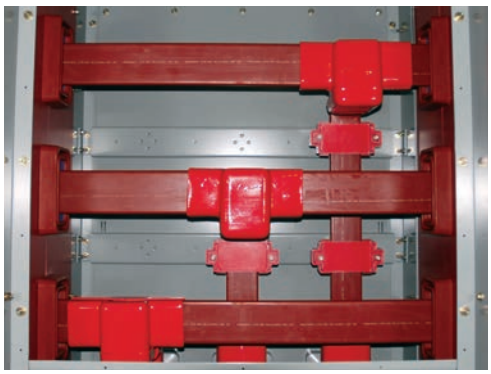

Figure 20: Bus bar joint assembly

Nylon nuts and bolts are used to hold the boot closed after it is installed. Carefully remove the insulation boots and save all hardware.

After the bus bar joint has been properly assembled, reinstall the insulation boots. Each boot installation includes two boots, an inner boot and an outer boot. Install the outer boot so that the seams of the outer boot do not line up with the seams of the inner boot. Secure the boot closed with the nylon nuts and bolts. Completed boot installation should be flush with the bus bar installation and overlap it by at least 4.25" (108 mm). In those cases where the boot does not close flush with the bus bar installation or the overlap is less than 4.25" (108 mm), apply one layer of tape (part number 15-171-987-001) half-lapped, overlapping the bus bar insulation and boot by 4.25" (108 mm).

Bus joint insulation-taping

Insulation boots are normally provided for repetitive or standard bus joint conditions. Where boots are not provided, the bus joints must be carefully taped to the required insulation level as described below. The transformer bus is usually spaced far enough apart that it does not require insulation (refer to Figure 21: Taped joint insulation-switchgear bus to transformer throat). However, the switchgear conductors must be insulated. Insulate any conductors that have less than 10.5" (267 mm) clearance between phases, or to ground.

1. Inspect bolted joints to verify they are correctly assembled, bolt heads in proper direction and hardware has been torqued to proper value. All surfaces must be free of dust, dirt or other foreign material.
2. Apply a mastic pad over nuts and a second pad over the bolt heads. Use either small (15-171-988-001: 3.25" x 4.50" (83 mm x 114 mm)) or large (15-171- 988-002: 4.50" x 6.50" (114 mm x 164 mm)) size pad most suitable for joint involved.

   Remove backing and press adhesive side up (away from conductor) and mold in place covering all sharp projections. Cover hardware and sharp edges of bus bar if any will be against the tape.

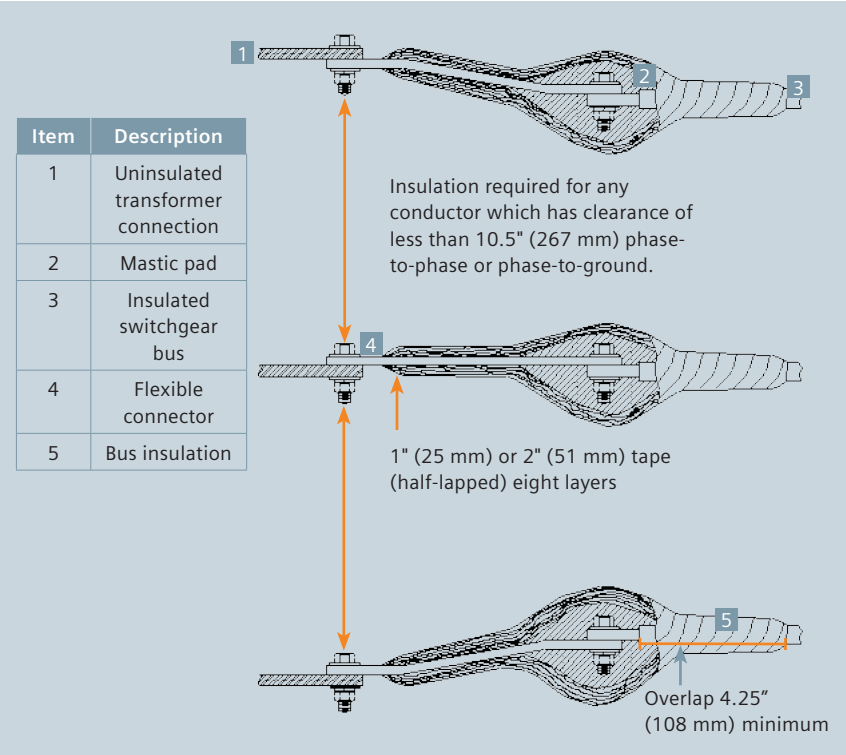

Item	Description
1	Uninsulated transformer connection
2	Mastic pad
3	Insulated switchgear bus
4	Flexible connector
5	Bus insulation

Figure 21: Taped joint insulation-switchgear bus to a power transformer throat

3. Apply half-lapped layers of 2" (51 mm) wide tape (15-171-987-004) or 1" (25 mm) wide tape (15-171- 987-001) over the joint. Each layer should overlap the bus bar insulation by at least 4.25" (108 mm). Stretching of tape 10 to 15 percent in problem areas may help in eliminating voids and wrinkles. Use eight half-lapped layers of tape over mastic pads.

Avoid excessive pressure on the completed bus joint insulation. If bus joints are on standoff insulators, apply tape per the above procedures except the half-lapped tape should overlap the insulator by at least 3" (76 mm).

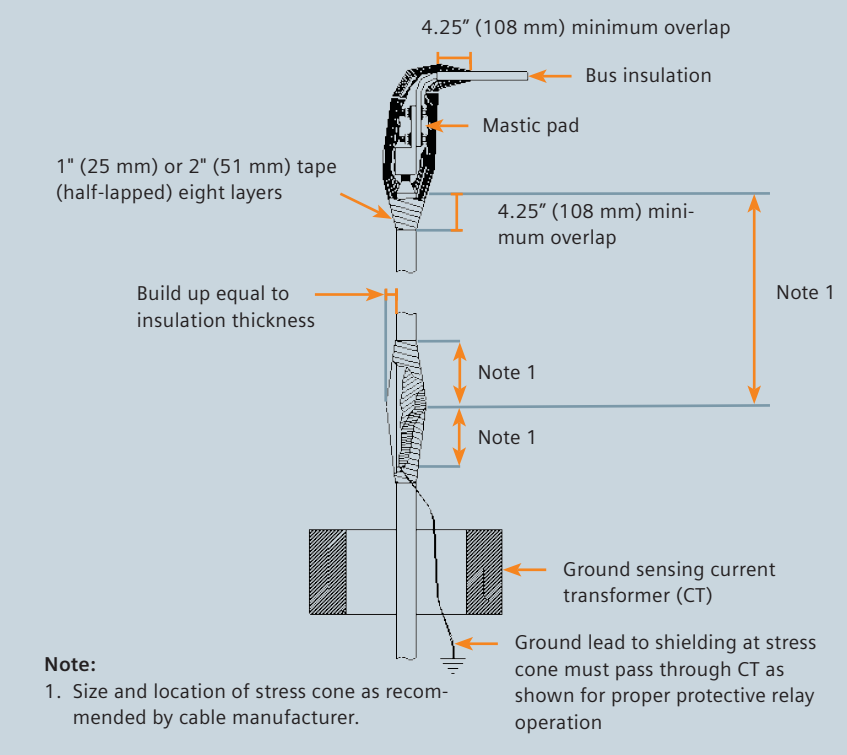

Figure 22: Primary cable termination and insulation

Transformer bus joints insulation

The typical transformer to switchgear bus joint shown in Figure 21: Taped joint insulation-switchgear bus to a power transformer throat on page 35 is different from other bus joints in the switchgear main bus. In the transformer bus joints, there is a transition from the fully insulated switchgear system to the transformer, where the spacing between conductors is usually large enough so that the conductors need not be insulated. The use of flexible connectors in this area insures correct alignment of the switchgear conductors to the transformer conductors. If the installed clearance (phase-to-phase or phase-to-ground) is less than 10.5" (267 mm), the joint must be insulated. Refer to Figure 21: Taped joint insulation-switchgear bus to a power transformer throat on page 35 and insulate bus joint connections as outlined under bus joint insulation-taping on page 35.

Primary cable connections

All cable connections to metal-clad switchgear must be fully insulated to comply with the ANSI/IEEE C37.20.2 definition of metal-clad switchgear. Insulation of terminations reduces the likelihood of occurrence of arcing faults. In addition, insulation of terminations is required to maintain the dielectric withstand capability of the installed equipment. Recommendations of the cable supplier should be followed for the installation. Typical termination configuration is shown in Figure 22: Primary cable termination and insulation and Figure 23: Typical cable terminal mounting and insulation on page 37.

Because of considerable variations in installation requirements and available cables, Siemens furnishes a double-bolt, double-clamp, terminal lug as standard.

For cable terminations, bus drilling is configured to accommodate cable terminals with hole patterns in accordance with NEMA CC-1 standards. All insulating and terminating materials other than terminal lugs and cable supports are to be furnished by the purchaser.

Secondary control wiring

Secondary control wiring is installed and tested at the factory. Inter-group wiring at shipping splits can be readily connected by referring to wire markings. These wires are not terminated and are of sufficient length to be routed to their termination point after cubicles are bolted together. Terminals for these leads are furnished by the purchaser to suit the available crimping tools. Terminal block hardware is furnished with the switchgear. All wiring diagrams needed for installation are furnished in advance.

Wires can be easily traced on wiring diagrams furnished for the switchgear. Each device is illustrated and identified with a letter. Each terminal on each device is identified by an alphanumeric code. The wire list adjacent to each device on the diagram indicates the device and terminal number to which each wire is connected at the next connection point.

Figure 23: Typical cable terminal mounting and insulation

Rear view (bottom cable)

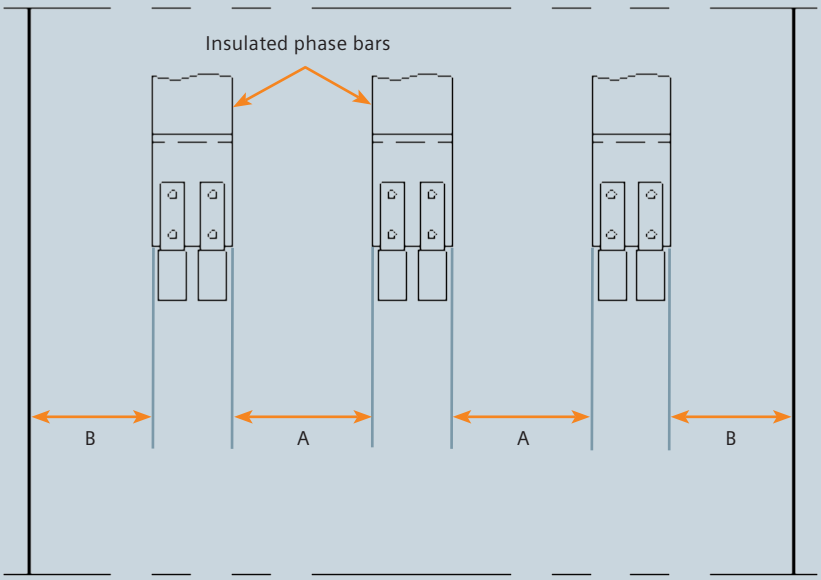

Minimum clearance over insulation phase-to-phase A and phase-to-ground B shall not be less than 8.44" (214 mm) for A and 7.47" (190 mm) for B.

Side view (top cable)

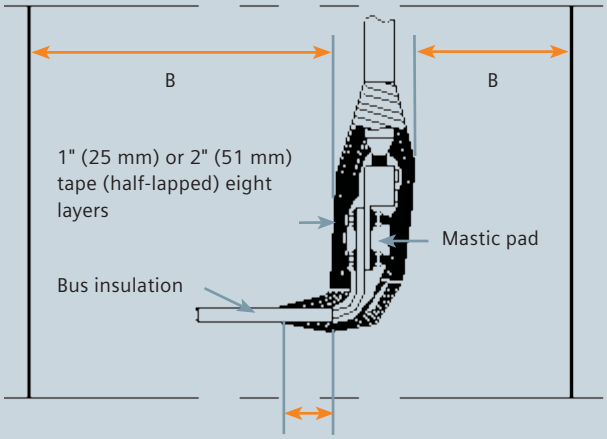

4.25" (108 mm) minimum overlap

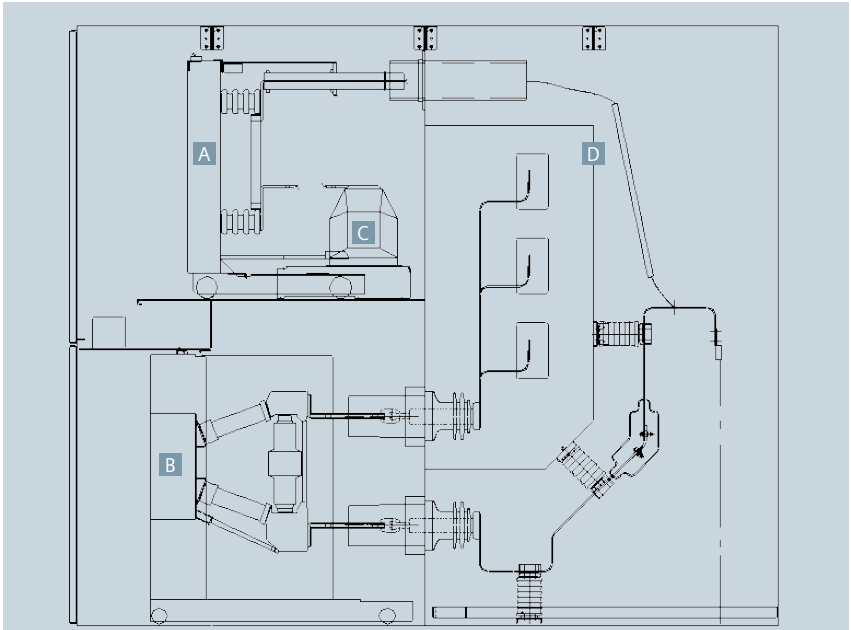

Item	Description	Item	Description
A	Fuse truck	B	Circuit breaker
C	VTs	D	Bus barrier

Figure 24: Typical cable termination-bottom exit cables

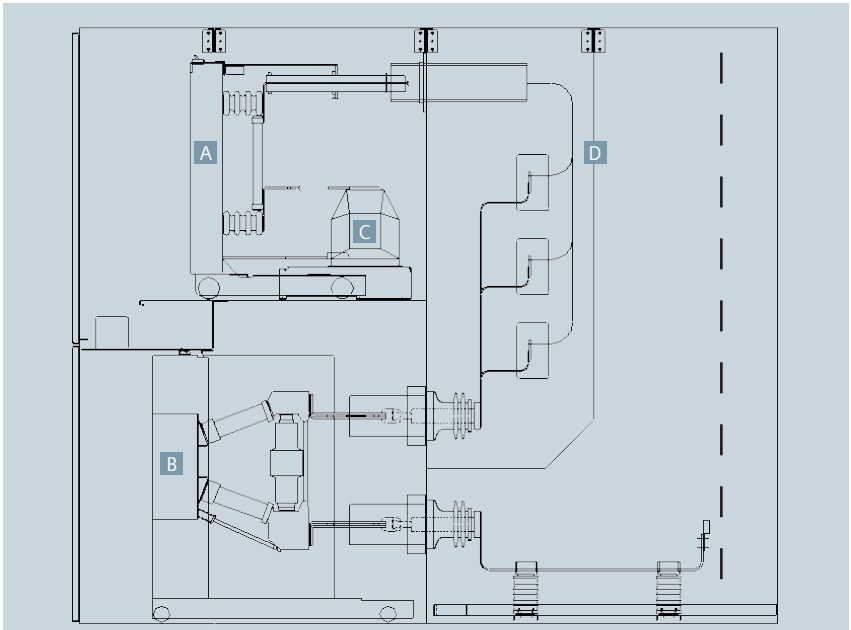

Item	Description	Item	Description
A	Fuse truck	B	Circuit breaker
C	VTs	D	Bus barrier

Figure 25: Typical cable termination-top exit cables

Figure 26: Typical cable termination compartment

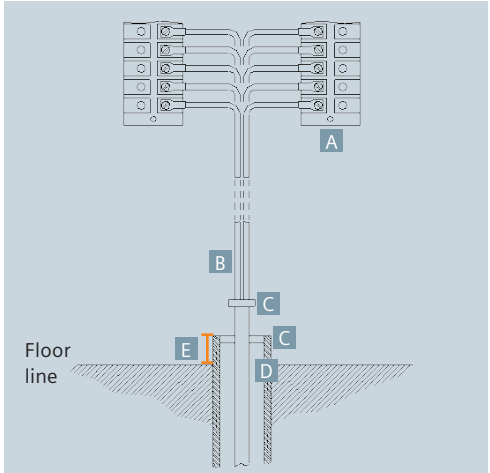

Item	Description	Item	Description
A	Terminal block	D	Conduit
B	Control cable	E	1.0" (25 mm) maximum
C	Seal		

Figure 27: Secondary control cable connections

All secondary control wiring installed by the factory is neatly bundled and attached to the cubicle device mounting plates. Make all field connections in a similar manner. Check that the circuit breaker, its components and the hinged front panel clear any additional wiring installed. Figure 27: Secondary control cable connections shows a typical secondary control cable installation. All purchaser wiring is to be routed behind the cable retainer, which is removable for installation purposes. Use plastic or nylon ties to secure all field installed wires to the cubicle structure.

Ground connections

A common ground bus is incorporated in all units for properly grounding the equipment after installation.

The ground bus extending through the switchgear is accessible in the primary cable area of each unit. The interunit connector has provisions for two bolts at each end. For ease of assembly, install bottom bolts first. Verify that the ground bar to the circuit breaker cell is also bolted to interunit bar, as shown in Figure 28: Ground bus connection.

Provision for connecting this ground bus must be made in such a manner that a reliable ground connection is obtained. Consult latest National Electrical Code® (NFPA 70®) for ground connection standards.

Temporary ground connections

It is strongly recommended that no work be done on current carrying parts until these parts have been disconnected from the system and solidly grounded. One method of solidly grounding the high-voltage circuit is by use of a grounding device. This device is placed in a cubicle in the same manner as a circuit breaker and provides a path to ground. It is furnished only when specified in the contract.

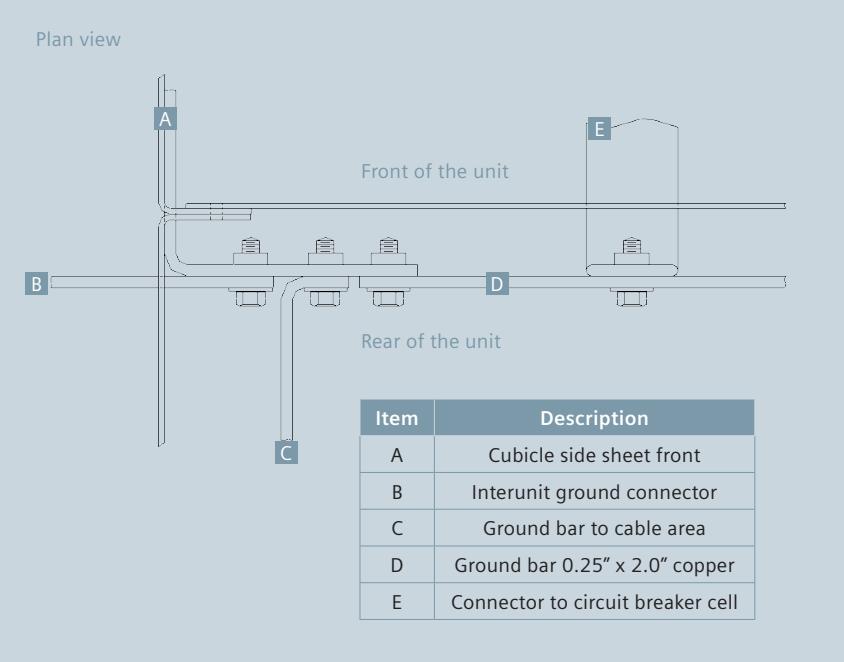

Item	Description
A	Cubicle side sheet front
B	Interunit ground connector
C	Ground bar to cable area
D	Ground bar 0.25" x 2.0" copper
E	Connector to circuit breaker cell

Figure 28: Ground bus connection

⚠ DANGER

Hazardous voltage.

Will cause death, serious injury and property damage.

Do not contact energized conductors.

De-energize and ground high-voltage conductors before working on or near them.

Instrument transformers

⚠ DANGER

Hazardous voltage.

Will cause death, serious injury and property damage.

Do not touch shutter or barrier if equipment is energized.

De-energize and ground high-voltage conductors before working on or near them.

Cell	Rollout truck may be used for:
A (upper)	Fuses for VT with VTs located behind rollout
B (lower)	Fuses for VT with VTs located behind rollout Fuses for CPT with CPT installed in rear of section

Table 5: Fuse rollout truck locations

Control power transformer (CPT) and voltage transformers (VTs) general information

When required, fuses for VTs or a CPT can be mounted on a withdrawable rollout fuse truck. Each auxiliary cell (A = upper or B = lower) can contain one rollout truck. Refer to Table 5: Fuse rollout truck locations for various rollout tray cell locations. The fuse rollout (or drawout) configuration is designed so that the load-side primary disconnects are grounded when the fuse rollout truck is withdrawn. This removes any residual charge from the transformer winding.

The rollout fuse truck is designed so that the front panel of the truck cannot be opened to gain access to the fuses until the rollout truck is in the DISCONNECT position in the cell. The rollout fuse truck cannot be racked in the cell unless the front panel of the rollout fuse truck is closed.

VTs

One, two or three VTs may be mounted behind the rollout truck located in cells A or B. Refer to the "Operating sequence" section beginning on page 42 for disconnecting, connecting or withdrawal instructions for the fuse truck.

CPTs

CPTs are stationary mounted, either in the rear of the switchgear section, or in the lower front cell. If the CPT is located in the rear of the section, the primary fuses are mounted on a rollout fuse truck located in the lower front cell. If the CPT is located in the lower front cell, the primary fuses are mounted on a rollout fuse truck, which is located in the upper cell. A secondary circuit breaker is provided, key interlocked with the rollout fuse truck so that the secondary circuit breaker must be locked open before the rollout fuse truck can be withdrawn.

Figure 29: Typical VT and CPT fuse rollout connections

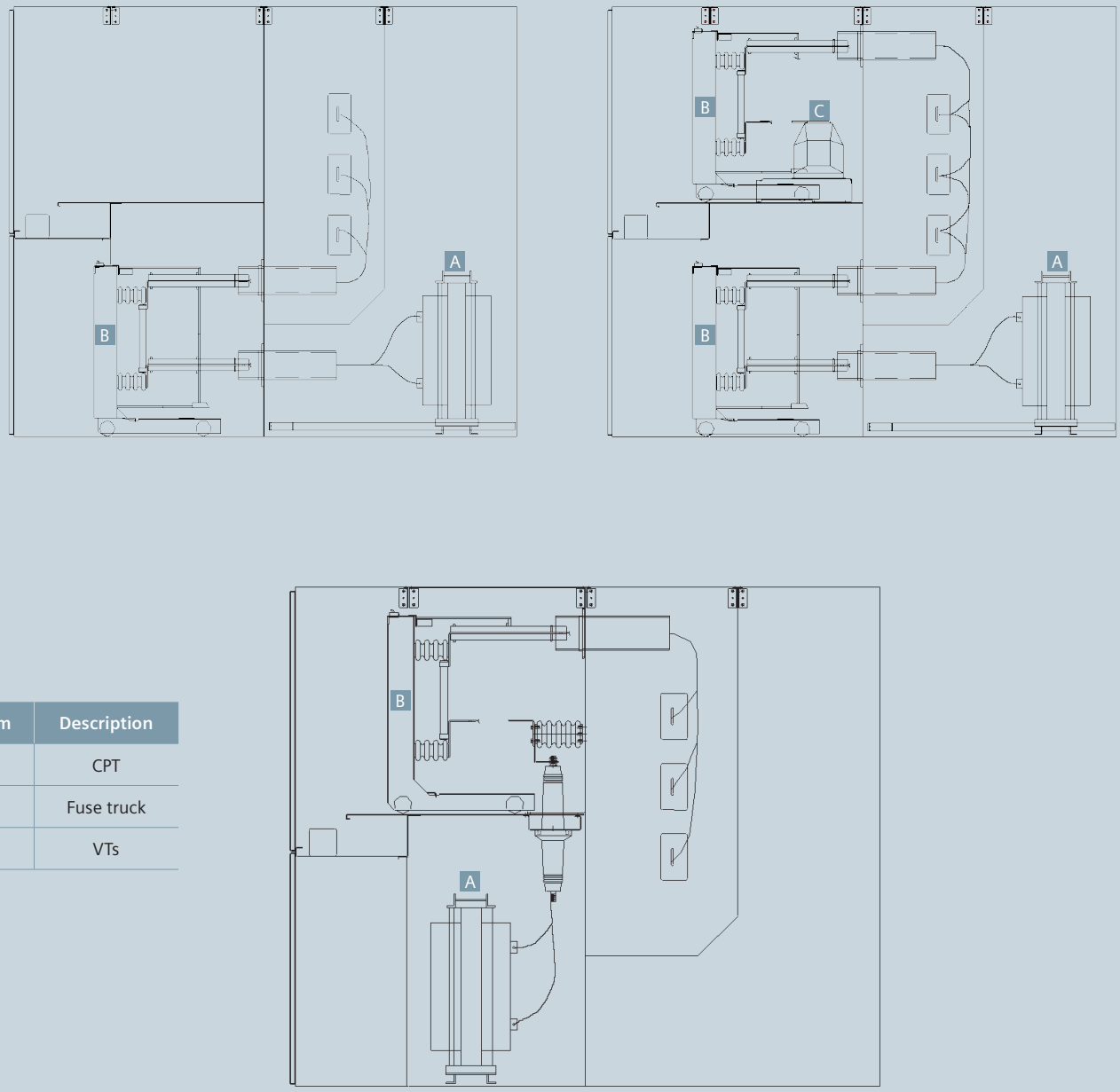

Item	Description
A	CPT
B	Fuse truck
C	VTs

Figure 30: Typical VT fuse rollout truck in CONNECT position

Figure 31: Rollout fuse truck removed, shutters closed and VT primary terminals grounded

Operating sequence

Disconnecting VT fuses

Disconnecting the VT fuses from the primary circuit is accomplished by racking the rollout fuse truck from the CONNECT position to the DISCONNECT position. The operating sequence is as follows:

1. Open the switchgear front door to allow access to the racking mechanism inside the cell.
2. Rack the rollout fuse truck in a smooth, continuous manner from the CONNECT to the DISCONNECT position. During racking, audible sound will be heard as the rollout fuse truck primary disconnect contacts separate from the cubicle disconnects. Do not stop racking as this noise is normal.
3. Once the rollout fuse truck is in the DISCONNECT position, the fuses are accessible by opening the front panel of the rollout fuse truck.
4. Close the switchgear front door.

If the drawout fuse truck is located at floor level, it may be rolled out of the cell without additional accessories. Refer to "Removal of a circuit breaker or drawout fuse truck from cell in indoor applications (if not on raised pad) and Shelter-Clad outdoor switchgear" on page 48.

If the drawout fuse truck is not located at floor level and removal from the cell is necessary, refer to "Removal of a circuit breaker or drawout fuse truck from cell in outdoor non-walk-in enclosures, or for indoor switchgear installed on a raised pad" beginning on page 48.

To connect VT fuses

Connecting VT fuses to the primary circuit is accomplished by racking the rollout fuse truck from the DISCONNECT position to the CONNECT position. The operating sequence is as follows:

1. Open the switchgear front door to allow access to the racking mechanism inside the cell.
2. Close the front panel of the rollout fuse truck. The truck cannot be racked unless the panel is closed.
3. Rack the rollout fuse truck in a smooth, continuous manner from the DISCONNECT to the CONNECT position. During racking, audible sound will be heard as the rollout fuse truck primary disconnect contacts separate from the cubicle disconnects. Do not stop racking as this noise is normal.
4. Once the rollout fuse truck is in between the DISCONNECT position and the CONNECT position, or is in the CONNECT position, the fuses are inaccessible as the front panel of the rollout fuse truck cannot be opened.
5. Close the switchgear front door.

To disconnect CPT fuses

Disconnecting CPT fuses from the primary circuit is accomplished by racking the rollout fuse truck from the CONNECT position to the DISCONNECT position. The key interlock sequence described must be followed in order to rack the rollout fuse truck. Refer to Figure 32: Rollout CPT fuse truck interlock locations on for location of key interlocks on page 43. The operating sequence is as follows:

1. Open the switchgear front door to allow access to the racking mechanism and interlocks inside the cell.
2. Locate the secondary molded-case circuit breaker, which is normally mounted on the interior secondary device panel.
3. Open the molded-case circuit breaker, and rotate key interlock (Key 1) to lock the molded-case circuit breaker in the OPEN position.
4. Remove Key 1, and insert it in the key interlock on the position indicator interlock assembly. This assembly is located on the bottom pan of the rollout fuse truck cell.
5. Rotate the interlock (Key 2). This withdraws an interlock bolt, and disables the position indicator interlock. It also "frees" Key 2.
6. Remove Key 2 and insert it in the key interlock (Key 2) on the racking mechanism for the rollout fuse truck.
7. Rotate Key 2, withdrawing the interlock bolt from the racking mechanism.
8. With the interlock bolt withdrawn, rack the rollout fuse truck in a smooth, continuous manner from the CONNECT position to the DISCONNECT position. During racking, audible sound will be heard as the rollout fuse truck primary disconnect contacts separate from the cubicle disconnects. Do not stop racking as this noise is normal.
9. Once the rollout fuse truck is in the DISCONNECT position, the fuses are accessible by opening the front panel of the rollout fuse truck.
10. Close the switchgear door.

Item	Description
A	Molded-case circuit breaker interlock key (Key 1) (not shown)
B	Racking mechanism interlock Key 2
C	Position indicator interlock Key 2
D	Position indicator interlock Key 1

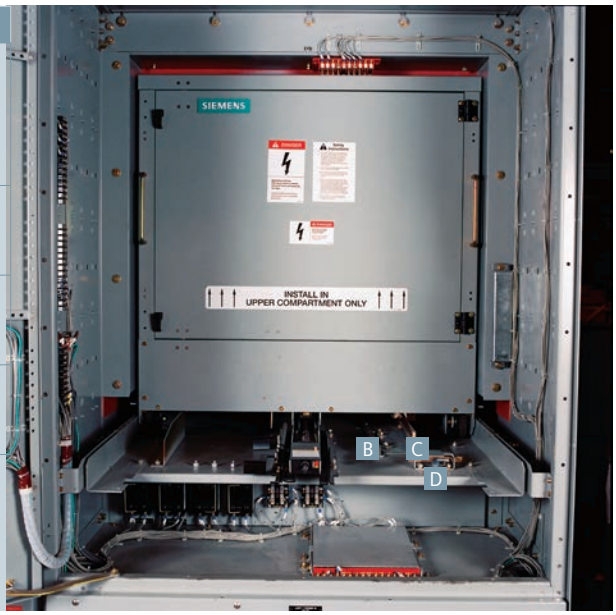

Figure 32: Rollout CPT fuse truck interlock locations

If the drawout fuse truck is located at floor level, it may be rolled out of the cell without additional accessories. Refer to "Removal of a circuit breaker or drawout fuse truck from cell in indoor applications (if not on raised pad) and Shelter-Clad outdoor switchgear" on page 48.

If the drawout fuse truck is not located at floor level and removal from the cell is necessary, refer to "Removal of a circuit breaker or drawout fuse truck from cell in outdoor non-walk-in enclosures, or for indoor switchgear installed on a raised pad" beginning on page 48.

To connect CPT fuses

Connecting CPT fuses to the primary circuit is accomplished by racking the rollout fuse truck from the DISCONNECT position to the CONNECT position. The key interlock sequence described must be followed in order to rack out the rollout fuse truck. Refer to Figure 32: Rollout CPT fuse truck interlock locations for location of key interlocks. The operating sequence is as follows:

1. Open the switchgear front door to allow access to the racking mechanism and interlocks inside the cell.
2. Close the front panel of the rollout fuse truck. The truck cannot be racked unless this panel is closed.

Figure 33: Type MD38 CTs installed on lower disconnect bushings (CT barrier removed for photo)

3. Note that the key interlock bolt must be withdrawn to allow operation of the racking mechanism. Rack the rollout fuse truck in a smooth, continuous manner from the DISCONNECT position to the CONNECT position. During racking, audible sound will be heard as the rollout fuse truck primary disconnect contacts separate from the cubicle disconnects. Do not stop racking as this noise is normal.
4. Rotate the key interlock on the racking mechanism, extending the interlock bolt to make the racking mechanism inoperative.
5. Remove the racking mechanism interlock key (Key 2) and insert it in the Key 2 position in the position indicator assembly.
6. Rotate Key 2 in the position indicator interlock assembly. This "traps" Key 2, and activates the position indicator interlock assembly.
7. Remove the Key 1 from the position indicator interlock assembly, and insert it in the key interlock associated with the molded-case circuit breaker (Key 1).
8. Rotate Key 1 in the molded-case key interlock. This "traps" this key, and allows the molded-case circuit breaker to be closed.
9. Close the molded-case circuit breaker.
10. Close the switchgear front door.

Current transformers (CTs)

The torroidal CTs shown installed in an unit in Figure 33: Type MD38 CTs installed on lower disconnect bushings (CT barrier removed for photo) are the most commonly used type in metal-clad switchgear equipment. The circuit breaker primary bushings pass through the CTs when in the CONNECT position. Types MD38 or MDD38 CTs are of the torroidal type mounted in the circuit breaker compartment behind the shutter barrier. Up to two (standard or high-accuracy) CTs may be mounted around each primary insulator tube. Up to four CTs per phase may be furnished.

A zero-sequence torroidal CT is furnished for ground sensing circuits. The CT is mounted in the primary cable area at a convenient height for receiving purchaser's cables. Zero-sequence CTs may require that conduits for multiple bottom entrance cables be recessed.

Circuit breaker positions

Cell preparation

The cell contains the positioning, interlocking and operating devices shown in Figure 34: Circuit-breaker compartment on page 45, Figure 35: Interlocks on bottom of circuit breaker on page 46 and Figure 36: MOC and TOC switches on page 45. These devices must be checked for placement and freedom of operation.

Circuit breaker racking mechanism

The circuit breaker racking mechanism is centered below the circuit breaker. It functions in conjunction with the trip-free interlock on the circuit breaker, or to hold the circuit breaker trip-free between positions. Three positions are provided:

- DISCONNECT
- TEST
- CONNECT.

Fuse rollout racking mechanism

The fuse rollout racking mechanism is very similar to the circuit breaker racking mechanism, except that only DISCONNECT and CONNECT positions are provided.

Interference blocking plate (rating interlock)

This plate is mounted vertically on the bottom of the cell to allow only the properly rated circuit breaker into the designated cell. For example, a 1,200 A circuit breaker can enter a 1,200 A cell and a 2,000 A circuit breaker can enter a 2,000 A cell, depending on the voltage, interrupting and close and latch ratings.

Item	Description
A	Interface blocking plate (rating interlock)
B	Racking mechanism
C	Ground bar
D	Guide rails
E	Trip-free and racking interlock padlock provisions
F	MOC switch operator
G	MOC switch terminals (one MOC installed)
H	Shutter operating linkage
I	Shutter (behind barrier)
J	CT barrier
K	Secondary disconnect

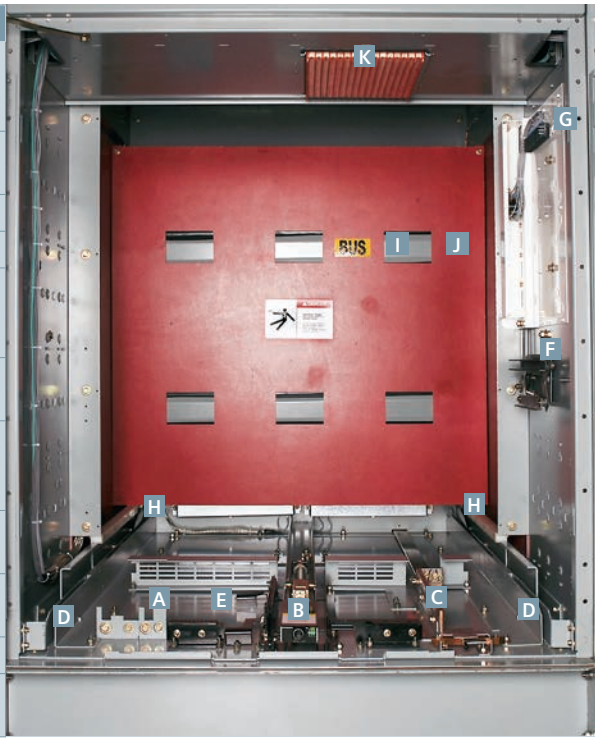

Figure 34: Circuit-breaker compartment

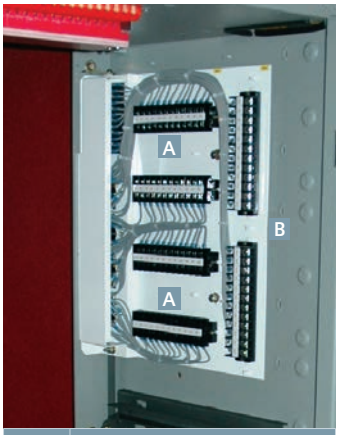

Item	Description
A	MOC switch terminals
B	TOC switch terminals

Figure 36: MOC and TOC switches

⚠ WARNING

Hazardous voltage.

Will cause death, serious injury and property damage.

Do not insert a circuit breaker into a cell intended for a circuit breaker with ratings above those of the circuit breaker being inserted.

Verify that the circuit breakers and cubicles have appropriate ratings and properly located interference blocking plates and angles before attempting to insert a circuit breaker.

Item	Description
A	Rating interlock
B	Closed circuit breaker interlock
C	Trip-free interlock
D	Spring-dump interlock
E	Circuit breaker ground disconnect

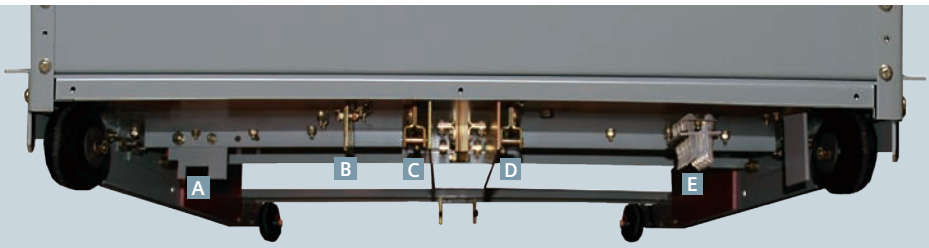

Figure 35: Interlocks on bottom of circuit breaker

Normally the cubicle and circuit breaker rating plate combinations will be identical.

The interlock will allow a 2,000 A circuit breaker to enter a 1,200 A cell, provided the voltage, interrupting and close and latch ratings are satisfactory.

The coordinating interference plate on the circuit breaker is shown in Figure 35: Interlocks on bottom of circuit breaker.

Secondary disconnect

The secondary disconnect contains all the electrical control circuit connections for the circuit breaker. It mates with the secondary disconnect block on the circuit breaker. The circuit breaker contacts slide against the cell contact strips. The secondary contacts are automatically mated in the TEST and CONNECT positions.

Mechanism-operated cell (MOC) switch

This switch is operated by a roller on the circuit breaker. The circuit breaker engages the MOC auxiliary switch only in the CONNECT (operating) position unless an optional TEST position pickup is specified in the contract. If a TEST position pickup is included, the circuit breaker will engage the auxiliary switch in both positions (refer to Figure 36: MOC and TOC switches on page 45).

Truck-operated cell (TOC) switch

This switch is operated by an extension of the top plate at the right top corner of the circuit breaker. This switch is operated only as the circuit breaker is moved to or from the CONNECT position (refer to Figure 36: MOC and TOC switches on page 45). Up to 12 stages may be provided.

Circuit breaker ground connection

A sliding contact finger assembly for grounding the circuit breaker frame is mounted underneath the circuit breaker truck frame (refer to Figure 35: Interlocks on bottom of circuit breaker). This assembly engages the ground bar mounted in the cell and maintains a solid ground contact with a continuous wipe through all positions. The contact is broken when the circuit breaker passes the DISCONNECT position while being removed from the cell.

Shutter operation

Two shutter operating levers are driven down by the engagement of the wheels on the circuit breaker frame. This opens the shutters as the circuit breaker is moved into the CONNECT position and allows the shutters to close when the circuit breaker is withdrawn. The shutters are fully closed with the circuit breaker in the TEST position.

Circuit breaker installation and removal

Type 38-3AH3 vacuum circuit breakers are shipped separately from the switchgear cubicles. Refer to instruction manual E50001-F710-A238-X-XXXX for information on installation, maintenance and handling of these circuit breakers.

Circuit breakers are normally shipped with their primary contacts OPEN and their springs DISCHARGED. However, it is critical to first verify the DISCHARGED condition of the spring-loaded mechanisms after de-energizing control power.

De-energizing control power to circuit breaker

Locate the control power disconnect device associated with the circuit breaker. This disconnect (typically a pullout type fuse holder) is normally located on the secondary device panel inside the upper cell of the structure. Removal of the fuse holder de-energizes control power to the circuit breaker in the respective switchgear cell. In some switchgear assemblies, a molded-case circuit breaker is used in lieu of the pullout type fuse holder. Opening the circuit breaker accomplishes the same result control power is disconnected.

Spring discharge check (refer to Figure 37: Front panel controls of type 38-3AH3 vacuum circuit breaker)

Perform the spring discharge check before removing the circuit breaker from the pallet or removing it from the switchgear.

Item	Description
A	Manual spring-charging port
B	CHARGE/DISCHARGE indicator
C	OPEN/CLOSED indicator
D	Operation counter
E	Manual close pushbutton
F	Manual open pushbutton

Figure 37: Front panel controls of type 38-3AH3 vacuum circuit breaker

⚠ DANGER

Hazardous voltage and high-speed moving parts.

Will cause death, serious injury and property damage.

Read instruction manuals, observe safety instructions and use only qualified personnel.

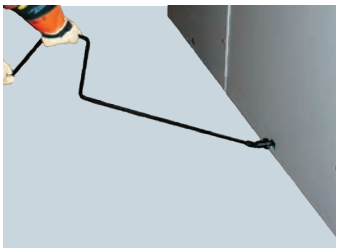

Figure 38: Racking of circuit breaker

Figure 39: Removal of a circuit breaker

Figure 40: Use of extension rails for removal of a circuit breaker or drawout fuse truck not at floor level

The spring discharge check should be performed after de-energizing control power. This check assures that both the tripping and closing springs are fully discharged.

Note: Do not perform the spring discharge charge check if the circuit breaker is in the CONNECT position. Open the circuit breaker and rack to the DISCONNECT position, and then perform the spring discharge check.

1. Assure that circuit breaker is not in CONNECT position in cell.
2. Open control power disconnect (for example, pull fuseholder or open molded-case circuit breaker).
3. Press red trip pushbutton.
4. Press black close pushbutton.
5. Again press red trip pushbutton.
6. Verify spring condition indicator shows DISCHARGED.
7. Verify main contact status indicator shows OPEN.

Removal of a circuit breaker or drawout fuse truck from cell in indoor (if not on a raised pad) and Shelter-Clad outdoor switchgear

After performing the spring discharge check (with control power de-energized), remove the circuit breaker from its switchgear cubicle. The spring discharge check step is only necessary for circuit breakers.

If your equipment has the optional electric racking device accessory, refer to Annex A for instructions for this device, which supplement the instructions in this section. The electrical racking device is only suitable for use with circuit breaker cells equipped with the necessary mounting brackets. The electrical racking device cannot be used with drawout fuse trucks.

1. Insert the racking crank on the racking screw on the front of the circuit breaker cell, and push in (refer to "Racking crank engagement procedure" on page 50). This action operates the racking interlock latch. Figure 38: Racking of a circuit breaker shows racking of a circuit breaker.
2. Rotate the racking crank counterclockwise until the circuit breaker is in the DISCONNECT position.
3. Move the circuit breaker release latch (on the floor of the cell near the right side of the circuit breaker) to the left and pull the circuit breaker out of the DISCONNECT position. The circuit breaker can now be removed from the cubicle.
4. The circuit breaker is now free to be rolled out on the floor using handles as shown in Figure 39: Removal of a circuit breaker. The wheels of the circuit breaker are at floor level (unless the switchgear is installed on a raised pad), and one person can easily handle the unit.

Removal of a circuit breaker or drawout fuse truck from cell in outdoor non-walk-in enclosures, or from indoor switchgear on a raised pad

Removal of the circuit breaker or drawout fuse truck from a non-walk-in outdoor switchgear assembly is similar to removal of a circuit breaker or drawout fuse truck at floor level, with several additional steps.

Figure 40: Use of extension rails for removal of a circuit breaker or drawout fuse truck not at floor level shows the two circuit breaker extension rails inserted in the fixed rails within the circuit breaker or drawout fuse truck cell. The rails engage locking pins in the fixed rails to secure them in position.

The procedure for removal of a circuit breaker or drawout fuse truck not located at floor level is:

1. Insert the two extension rails into the fixed rails. Be sure the extension rails are properly secured in place. (This can be performed at step 4 if preferred.)
2. Insert the racking crank on the racking screw on the front of the circuit breaker or drawout fuse truck cell, and push in (refer to "Racking crank engagement procedure" on page 50). This action operates the racking interlock latch.
3. Rotate the racking crank counterclockwise until the circuit breaker or drawout fuse truck is in the DISCONNECT position.

⚠ WARNING

Heavy weight.

Can result in death, serious injury or property damage.

Always use extension rails to remove or install a circuit breaker or drawout fuse truck not installed at floor level.

Figure 41: Lift truck with circuit breaker

⚠ WARNING

Heavy weight.

Can result in death, serious injury or property damage.

Never transport a circuit breaker or drawout fuse truck on a lift truck with the circuit breaker or drawout fuse truck in the raised position.

4. If you have not yet installed the extension rails, do so now.
5. Move the release latch to the left and pull the circuit breaker or drawout fuse truck out from the DISCONNECT position. The circuit breaker or drawout fuse truck is now free to be rolled out on the two extension rails using the handles on the front of the circuit breaker or drawout fuse truck.
6. Remove the circuit breaker or drawout fuse truck from the two extension rails using the approved Siemens lift truck (refer to Figure 41: Lift truck with circuit breaker) or a Siemens lift sling (refer to Figure 48: Lift sling in use to handle circuit breaker on page 62).
7. Lift the two extension rails and withdraw them from the switchgear.

The type 38-3AH3 vacuum circuit breakers weigh between 800 and 1,050 lbs (364-478 kg), depending upon their ratings. The drawout fuse truck weighs approximately 650 lbs (295 kg). The circuit breaker or drawout fuse truck can be moved using a properly rated crane and lift sling. A lift sling can be attached to the circuit breaker or drawout fuse truck, and then used to hoist the circuit breaker or drawout fuse truck vertically clear of the extension rails. When clear, remove the extension rails and lower the circuit breaker or drawout fuse truck to the floor.

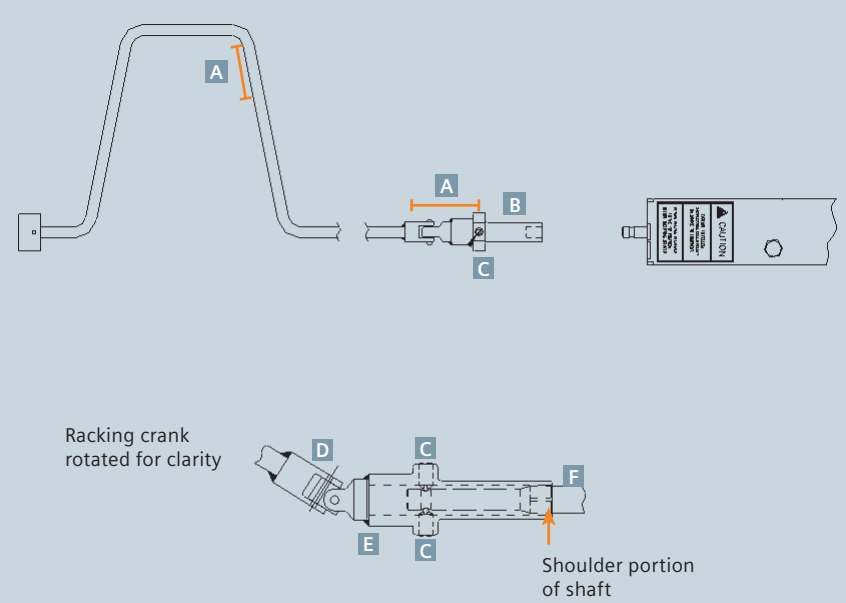

Item	Description	Item	Description
A	Hand position	D	Articulated joint
B	Socket assembly	E	Custom socket
C	Spring plunger	F	Racking mechanism shaft

Figure 42: Racking crank engagement procedure

Racking crank engagement procedure

A crank for racking the drawout unit is provided as a standard accessory. Racking of a circuit breaker can be accomplished with the drawout compartment front door open or through a small opening (or window) in the front door, with the door closed. Racking of a rollout fuse truck is accomplished with the compartment front door open.

The racking crank consists of an offset handle end with a custom socket assembly welded to the end. The socket end of the racking crank is designed to engage the shoulder of the racking mechanism shaft and remain engaged during racking by means of two spring plungers located 180 degrees from each other. The socket plungers operate in a manner similar to the retainers of an ordinary mechanic's socket wrench.

The portion of the racking mechanism shaft which is visible is cylindrical, and the shoulder of the racking mechanism shaft is hidden by a shroud until the engagement procedure starts. The square socket end of the crank will only engage the shoulder of the shaft if it is aligned properly.

If your equipment has the optional electric racking device accessory, refer to Annex A for instructions for this device, which supplement the instructions in this section. The electrical racking device is only suitable for use with circuit breaker cells equipped with the necessary mounting brackets. The electrical racking device cannot be used with drawout fuse trucks.

The suggested procedure to engage the racking mechanism is as follows:

1. The circuit breaker must be OPEN. (The racking shroud cannot be moved if the circuit breaker is CLOSED.)
2. Hold the socket of end of the racking crank in one hand and the crank handle in the other hand (refer to Figure 42: Racking crank engagement procedure).
3. Place the socket over the end of the racking mechanism shaft. Align the socket with the shoulder on the racking mechanism.

Note: If the socket is not aligned, the socket will not be able to engage the shoulder of the racking mechanism shaft.

4. Once alignment is achieved, firmly push the crank and socket assembly toward the racking mechanism.
5. When properly engaged, the crank should remain connected to the racking mechanism, due to socket plungers. If the crank does not remain in position, adjust the spring plungers clockwise one-half turn. This will increase the contact pressure of the spring plunger.
6. To remove the racking crank, pull the assembly off of the racking mechanism shaft.

Note: If the effort to rack the circuit breaker increases considerably during racking, or if turning of the ranking crank requires excessive force, stop racking immediately. Do not try to "force" the racking crank to rotate, or parts of the circuit breaker or racking mechanism could be damaged. Determine the source of the problem and correct it before continuing with racking.

Circuit breaker or drawout fuse truck racking

When inserting a circuit breaker or drawout fuse truck into a cell, be sure that the racking block is in the lowered position as shown in Figure 43: Racking mechanism with racking block down. In this position, the racking position indicator should show a green square with the letter "D" for DISCONNECT position. If the racking block is in the raised position (refer to Figure 44: Racking mechanism with racking block up), use the racking crank to move the racking block to the lowered position.

Important: Failure to follow instructions may result in damage to equipment.

Return racking mechanism to the DISCONNECT position before inserting a circuit breaker or drawout fuse truck.

The circuit breaker racking method has been designed to be used with the compartment door either open or closed. Moving the circuit breaker between the CONNECT and TEST or DISCONNECT positions with the door closed provides additional protection to the operator and is the recommended procedure.

If your equipment has the optional electric racking device accessory, refer to Annex A for instructions for this device, which supplement the instructions in this section. The electrical racking device is only suitable for use with circuit breaker cells equipped with the necessary mounting brackets. The electrical racking device cannot be used with drawout fuse trucks.

Racking into CONNECT position

1. Check the position indicator shows "D" for DISCONNECT position.
2. Check that the circuit breaker is fully pushed into the cell to the DISCONNECT position.
3. Check that the circuit breaker is OPEN.
4. Secondary disconnects will automatically connect as the circuit breaker moves to the TEST and CONNECT position.
5. Close the instrument door.
6. Insert racking crank through round opening at the bottom of the door and onto the racking screw (refer to "Racking crank engagement procedure" on page 50).
7. Push the racking crank forward to move the closed circuit breaker racking interlock slide back, that will allow the socket to engage the shoulder on the racking screw. Do not force slide as it is interlocked to prevent sliding forward when the circuit breaker is closed.
8. With constant pressure on the racking crank, rotate clockwise about 87 times until a positive stop is felt and the position indicated shows "C" for CONNECT position. The indicator will show "T" when the circuit breaker is in TEST position.

Racking to TEST or DISCONNECT position

1. This procedure is essentially the same as racking to CONNECT position procedure except the rotation is counterclockwise.
2. Check that the circuit breaker is OPEN.
3. Close instrument door.
4. Insert racking crank (refer to "Racking crank engagement procedure" on page 50) and rotate counterclockwise about 87 times to a position stop and the position indicator indicates "D" for DISCONNECT position. The intermediate TEST position is indicated by a "T".

Contact penetration

Make certain all electrical connections to both the line/load and bus disconnects are de-energized and locked out. This can be verified by blocking the shutters open and using a hot stick potential device to double-check that all disconnects are de-energized. Rack the circuit breaker completely into the CONNECT position and then withdraw it from the cell. Check that the contact wipe is about 3/8" on the cell primary disconnects for all circuit breaker ratings.

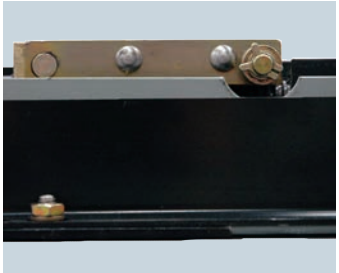

Figure 43: Racking mechanism with racking block down

Figure 44: Racking mechanism with racking block up

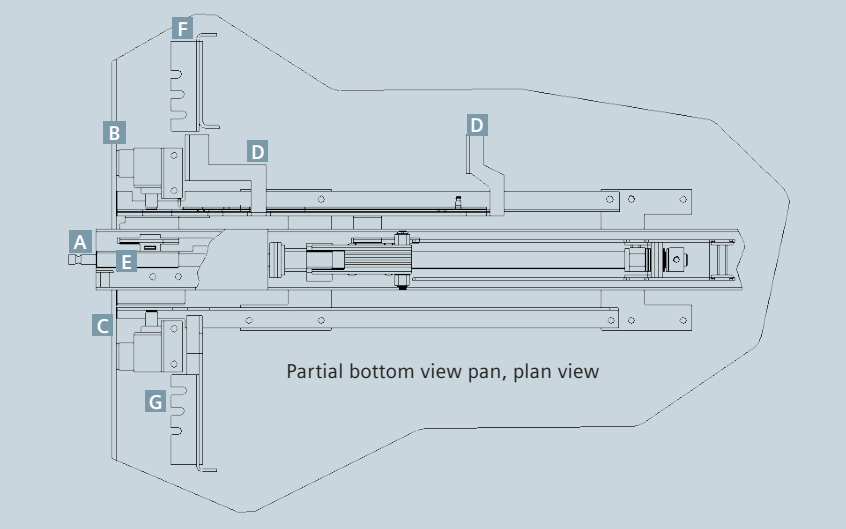

Item	Description	Item	Description
A	Screw racking mechanism assembly	E	Racking interlock slide
B	Trip-free key interlock assembly (optional)	F	Trip-free interlock padlock provision
C	Racking key interlock assembly (optional)	G	Racking interlock padlock provision
D	Trip-free interlock slide		

Figure 45: Racking mechanism and interlocks

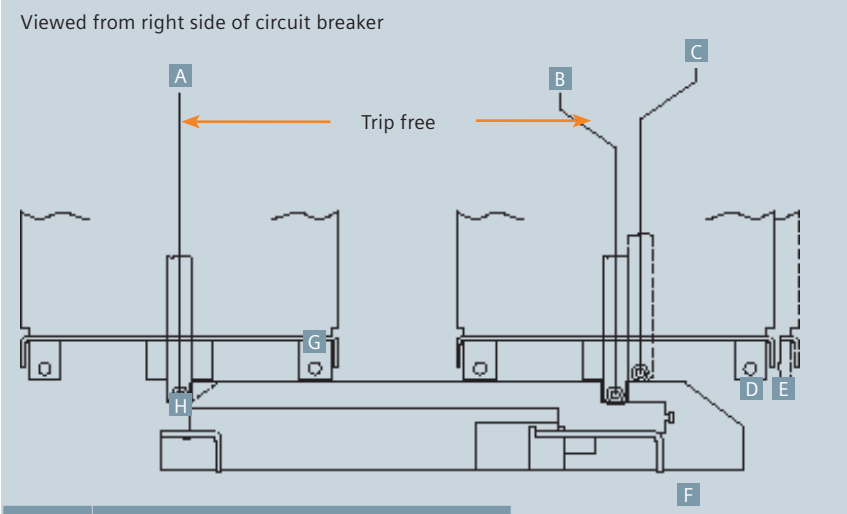

Item	Description
A	Connect position
B	Test position
C	Disconnect position
D	Circuit breaker test position
E	Circuit breaker disconnect position
F	Trip-free interlock slide
G	Circuit breaker connect position
H	Trip-free roller assembly on circuit breaker

Figure 46: Trip-free interlock positions

Closed circuit breaker racking interlock

The closed circuit breaker racking interlock is designed to prevent a circuit breaker from being racked from TEST to CONNECT and vice-versa with the primary contacts closed. Only an OPEN circuit breaker is to be moved between these positions (refer to Figure 45: Racking mechanism and interlocks).

The trip-free interlock slide has angle-shaped members (refer to Figure 45: Racking mechanism and interlocks, item D) that project from the left side of the racking mechanism and engage an interlock member from the circuit breaker. The circuit breaker interlock extends down to prevent movement of the trip-free interlock slide with the circuit breaker closed. When engaged, the racking screw is not accessible to the racking crank until the circuit breaker has been opened.

Note: Racking handle must be removed, allowing the interlock slides to return to their initial position. The circuit breaker may not be closed mechanically or electrically.

Racking access interlock

The racking interlock slide (refer to Figure 45: Racking mechanism and interlocks, item E) has provisions for three padlocks to prevent engagement of the racking crank to the racking screw. This allows locking of the circuit breaker in DISCONNECT, TEST or CONNECT positions. Key interlocking (refer to Figure 45: Racking mechanism and interlocks, item C) can be provided for racking sequence interlocking of dummy circuit breakers, etc. When locked in DISCONNECT position, the circuit breaker or dummy circuit breaker can be removed for servicing.

Trip-free interlock

The trip-free interlock slide prevents a circuit breaker from being closed between the TEST and CONNECT positions by maintaining a mechanical and electrical trip-free condition (refer to Figure 46: Trip-free interlock positions on page 52).

As the circuit breaker moves between the TEST and CONNECT positions, the trip-free roller engages the trip-free rail of the racking device. As the roller travels, the trip-free rail between positions, the roller activates the trip linkage that holds the circuit breaker in a mechanically trip-free condition.

In order to lock the circuit breaker trip-free in either TEST or CONNECT positions, the circuit breaker must be opened by the trip-free interlock slide assembly pushed away to lift the trip-free roller on the circuit breaker. This position permits the use of a key interlock (refer to Figure 45: Racking mechanism and interlocks, item B on page 52) or padlocks (up to three) to maintain the mechanism in trip-free position. The circuit breaker can be removed for servicing while interlocked in the trip-free position.

The interlock can be tested by racking the circuit breaker to a position between TEST and CONNECT position with the closing springs charged. Activating the close function either electrically or manually will cause the springs to discharge and the interlock to prevent the circuit breaker from closing. This is also true when the circuit breaker is in either the TEST or CONNECT positions and the trip-free interlock slide is pushed away and key interlocked or padlocked. The circuit breaker will operate trip-free when closing is attempted.

Spring discharge interlock

The closing spring discharge interlock prevents the insertion or removal of a circuit breaker with a charged mechanism. The spring dump roller rides up a rail releasing the closing springs while held trip-free. This discharges the closing springs without closing the circuit breaker primary contacts (refer to Figure 35: Interlocks on bottom of circuit breaker on page 46).

Inspection and testing

Inspection and testing

Before the equipment is energized, it must be thoroughly inspected and tested. Correct any deviations before energization.

Inspection

Check the following points:

1. High-voltage connections properly insulated.
2. Electrical disconnecting contacts, machined parts, shutter, etc., checked for lubrication and operation.
3. Blocking, supports and other temporary ties removed from circuit breakers, instruments, protective relays, etc.
4. Proper fuses correctly placed.
5. Temporary wiring jumpers (used on the secondaries of CTs tied to external devices, as shown on wiring diagrams) removed.
6. Ground connections properly made.
7. Incoming primary and secondary connections properly made and checked for shorts or undesired grounds.
8. All equipment removed during assembly has been replaced.
9. Protective relays coordinated with other protective relays and devices on the system. Refer to protective relay instructions before making any adjustments. Consult the local utility before making any connections to the power supply.
10. Storage battery fully charged and provided with recharging facilities.
11. Interlocks performing properly.
12. Circuit breakers checked and prepared per instruction manuals.
13. All filters in vent areas are clean and free of shipping or construction material.

Testing

1. An insulation resistance test is made on the high-voltage circuit to be sure that all connections made in the field are properly insulated. An insulation resistance test is also advisable on the control circuit.
2. A dielectric test, if possible, should be made on the high-voltage circuit for one minute at one of the following voltages corresponding to the rated volts of the equipment. **(VTs, CPTs, surge arresters and surge capacitors must be disconnected during this test).**

Rated maximum voltage	Power frequency withstand	Field test voltage	
kV (rms)	kV (rms)	kV (rms)	kV (dc)
38	80	60	85

⚠ CAUTION

Excessive test voltages.

May result in damage to equipment.

Do not perform dielectric tests at test voltages exceeding the ratings of the tested equipment.

Note: The dc test voltage is given as a reference only for those using dc tests to verify the integrity of the connected cable installations without disconnecting the cables from the switchgear. It represents values believed to be appropriate and approximately equivalent to the corresponding power frequency withstand test values specified for each voltage rating of switchgear. The presence of this column in no way implies any requirement for a dc withstand test on ac equipment or that a dc withstand test represents an acceptable alternative to ac withstand tests. When making dc tests, the voltage should be raised to the test value in discrete steps and held for a period of one minute.

In accordance with ANSI/IEEE C37.20.2, clause 6.5, field dielectric tests are also recommended when new units are added to an existing installation, or after major field modifications. The equipment should be put in good condition prior to the field test. It is not expected that equipment shall be subjected to these tests after it has been stored for long periods of time or has accumulated a large amount of dust, moisture or other contaminants without being first restored to good condition.

A dielectric test on secondary and control circuits should be made for one minute at 1,125 Vac or 1,590 Vdc. The above voltages are in accordance with NEMA standards. Certain control devices, such as motors and motor circuits, should be tested at 675 Vac. Electronic devices should be tested at the voltages specified in the instruction manual for the electronic device.

3. With circuit breaker in the TEST position make the following tests on each unit:
   A. Trip and close the circuit breaker with the control switch.
   B. Trip the circuit breaker by passing sufficient current (or voltage, if applicable) through the coils of protective relays.
   C. Trip and close the circuit breaker from any remote control locations.
   D. Operate auxiliary devices.
   E. Test the phase sequence of polyphase, high-voltage circuits, particularly those used for motor starting.

Operation

Placing equipment into service

To place equipment in service for the first time, proceed as follows:

1. Check that all circuit breakers are OPEN and all control circuits energized.
2. Connect primary incoming power source to equipment.

Note: the primary incoming source should be at the lowest voltage possible and gradually brought up to normal.

3. Check all instruments, protective relays, meters, etc., during this time.
4. Connect as small a load as possible and observe instruments.

Note: Allow several minutes before connecting additional load.

5. Gradually connect more load to the equipment while observing instruments until the full load is connected.
6. Check for signs of overheating of primary and secondary circuits and satisfactory operation of all instruments during the first week of operation.

Maintenance

⚠ DANGER

Hazardous voltage and high-speed moving parts.

Will cause death, serious injury and property damage.

Do not work on energized equipment. Always de-energize and ground the equipment before working on the equipment.

Introduction and maintenance intervals

Periodic inspections and maintenance are essential to obtain safe and reliable operation of the switchgear. When type GM38 switchgear is operated under "usual service conditions", maintenance and lubrication is recommended at five year intervals. "Usual" and "unusual" service conditions for medium-voltage, metal-clad switchgear are defined in ANSI/IEEE C37.20.2, clauses 4 and 8.1. Generally, "usual service conditions" are defined as an environment in which the equipment is not exposed to excessive dust, acid fumes, damaging chemicals, salt air, rapid or frequent changes in temperature, vibration, high humidity and extremes of temperature.

The definition of "usual service conditions" is subject to a variety of interpretations. Because of this, you are best served by adjusting maintenance and lubrication intervals based on your experience with the equipment in the actual service environment.

Regardless of the length of the maintenance and lubrication interval, Siemens recommends that circuit breakers should be inspected and exercised annually.

For the safety of maintenance personnel as well as others who might be exposed to hazards associated with maintenance activities, the safety related work practices of NFPA 70E should always be followed when working on electrical equipment. Maintenance personnel should be trained in the safety practices, procedures and requirements that pertain to their respective job assignments. This instruction manual should be reviewed and retained in a location readily accessible for reference during maintenance of this equipment.

The user must establish a periodic maintenance program to ensure trouble-free and safe operation. The frequency of inspection, periodic cleaning and preventive maintenance schedule will depend upon the operation conditions. NFPA Publication 70B, "Electrical Equipment Maintenance" may be used as a guide to establish such a program.

A preventive maintenance program is not intended to cover reconditioning or major repair, but should be designed to reveal, if possible, the need for such actions in time to prevent malfunctions during operation.

DANGER

Hazardous voltage and high-speed moving parts.

Will cause death, serious injury and property damage.

Do not contact energized bus. Before working on or near high-voltage conductors within switchgear, be sure they are de-energized and properly grounded.

Switchgear assemblies are enclosed on all sides and top with sheet metal. Access into the enclosure is provided by doors or removable covers. Although the bus and connections are insulated in metal-clad switchgear assemblies, it is a coordinated insulation system; insulation plus air or creep distance equals a given insulation level.

Refer to ANSI/IEEE C37.20.2, clause 7.9, which reads as follows:

"This insulating covering is a requirement of metal-clad switchgear and is provided to minimize the possibility of communicating faults and prevent the development of bus faults that would result if foreign objects momentarily contacted bare bus. This insulating covering is usually only a part of the primary insulation system, and in such cases the outer surface of this insulating covering will not be at ground potential. It should not be assumed, therefore, that personnel can contact this insulating covering with complete safety."

Recommended hand tools

Type GM38 switchgear and type 38-3AH3 vacuum circuit breakers use both standard imperial (U.S. customary) and metric fasteners. Imperial (U.S. customary) fasteners are used in most locations in the switchgear cubicles.

Recommended maintenance and lubrication

Periodic maintenance and lubrication should include all the tasks shown in Table 6: Maintenance tasks.

The list of tasks in Table 6: Maintenance tasks does not represent an exhaustive survey of maintenance steps necessary to verify safe operation of the equipment. Particular applications may require further procedures. Should further information be desired or should particular problems arise not covered sufficiently for the Purchaser's purposes, the matter should be referred to Siemens at 1-800-347-6659 or 1-919-365-2200 outside the U.S.

DANGER

The use of unauthorized parts in the repair of the equipment or tampering by unqualified personnel will result in dangerous conditions that will cause death, serious injury or equipment damage.

Follow all safety instructions contained herein.

⚠ DANGER

Failure to maintain the equipment will result in death, serious injury or product failure, and can prevent successful functioning of connected apparatus.

The instructions contained herein should be carefully reviewed, understood and followed.

The maintenance tasks in Table 6: Maintenance tasks must be performed regularly.

Table 6: Maintenance tasks

Maintenance tasks
1. Before any maintenance work is performed within primary compartments, make certain that the equipment is completely de-energized, tested, grounded, tagged or locked out and released for work in an authorized manner.
2. Before starting work on the switchgear, the following should be completed on any equipment that will affect the area of the work: A. Disable remote control and automatic transfer schemes. B. De-energize all direct and backfeed power and control sources, test and ground. C. Disconnect all voltage and control power transformers. D. Open all disconnects.
3. Include the following items in your inspection procedure: A. Check general condition of switchgear installation. B. Inspect switchgear interior for accumulation of dust, dirt or any foreign matter. C. Clean air filters by washing in any mild household detergent. D. Examine indicating lamps and replace as required. E. Check terminal block contacts for loose connections. F. Check instrument and control switches and inspect their contacts. G. Check for proper condition of instrument transformers. Replace burned out fuses, if any. Check primary and secondary connections. H. Remove dust from all insulators and insulation. I. Inspect bus bars and connections for proper condition. If bus bars are overheating check for poor or loose connections or for overload. J. Examine automatic shutters for proper operation. K. Examine all safety interlocks. L. Perform maintenance of circuit breakers as outlined in circuit breaker instruction manual. M. Check space heaters and thermostat (if equipped) for proper operation. N. Maintain other equipment in accordance with the respective instruction book requirements. O. Lubricate mechanisms, contacts and other moving components. P. Replace, reassemble, re-insulate and return all items to proper operating conditions and remove grounds prior to energization.

⚠ DANGER

Hazardous voltage.

Will cause death, serious injury and property damage.

Read instruction manuals, observe safety instructions and use qualified personnel.

Lubrication

It is essential that switchgear be lubricated carefully and properly to guard against corrosion and to ensure that all operating parts work freely.

Old grease should be removed annually and parts relubricated. Relubricate at more frequent intervals.

Lubricate shutter guide, bearings, rollout fuse truck moving parts, etc.

For all lubrication (except electrical moving or sliding surfaces), use one of the following:

- Klüber Isoflex Topas L32 (part 3AX11333H)
- Klüber Isoflex Topas L32N (spray) (part 15-172-879-201).

Source:

- Klüber Isoflex Topas L32 or L32N: Klüber Lubrication North America L.P. www.klueber.com.

Note: Use of lubricant not suitable for the application will make the mechanism very difficult to operate.

Electrical contacts

Lubricate stationary silver-surfaced contacts with electrical contact lubricant part no. 15-172-791-233 prior to use, as follows:

1. Wipe contacts clean
2. Apply lubricant to contact surfaces
3. Wipe off excess lubricant, leaving a film. Avoid getting lubricant on insulation.

Cleaning insulation

Most of the plastics and synthetics used in insulation systems are attacked by solvents containing aromatics or halogenated hydrocarbons. The use of these may cause crazing and deformation of the material reducing the dielectric strength. Isopropyl alcohol is the only recommended solvent cleaner.

Corrosive atmospheres

This switchgear is designed to give top performance when installed in normal indoor or outdoor locations. Where abnormal conditions, such as corrosive atmospheres, are encountered, special precautions must be taken to minimize their effect. Exposed metallic surfaces, non-insulated bus bars, disconnect switches, primary and secondary disconnecting contacts, wire ends, instrument terminals, etc., must all be protected.

At each maintenance inspection, all of the old grease should be wiped off of the contacts and new lubricant applied to all sliding surfaces. Apply the contact lubricant in a layer .03-.06" (1-2 mm) thick. Use only Siemens electrical contact lubricant, part no. 15-172-791-233, available in 8 oz. (.23 kg) cans. Other exposed components can be protected with a coat of glyptol or other corrosion-resistant coating. When old grease becomes dirty, wipe the part clean and apply new grease immediately.

DANGER

The use of unauthorized parts in the repair of the equipment or tampering by unqualified personnel will result in dangerous conditions that will cause death, serious injury or equipment damage.

Follow all safety instructions contained herein.

Protective relays and instruments

To insure satisfactory operation of protective relays and instruments, do not leave device covers off longer than necessary. When a cover has been broken, cover the device temporarily and replace broken glass as soon as possible.

Equipment surfaces

Inspect the painted surfaces and touch up scratches as necessary. Touch-up paint is available from Siemens. This paint matches the unit and is thinned and ready for use in one pint (473 ml^3) spray cans.

Accessories

Split plug jumper test device

When specified, a split plug jumper test device is supplied. This device allows a circuit breaker to be operated from the control switch on the instrument panel while the circuit breaker is outside of and adjacent to its cell.

The split plug jumper consists of a length of flexible cable with terminal plugs on each end. These terminals may be connected to the secondary disconnects on the circuit breaker and in the cell. When connected to the circuit breaker, they may be opened or closed electrically from the instrument panel control switch.

Test cabinet

When specified, a test cabinet is supplied. This device allows a circuit breaker to be operated from a control switch in a cabinet, which is wall mounted by the purchaser. A length of flexible cable is connected to the cabinet and has a terminal plug on the other end, which may be connected to the secondary disconnects on the circuit breaker. When connected, the circuit breaker may be opened or closed electrically from the control switch on the test cabinet, which is connected to a suitable power supply by purchaser.

Lift truck

When specified, a lift truck is supplied (refer to Figure 41: Lift truck with circuit breaker on page 49) for handling circuit breakers or fuse rollout trucks. For indoor installations, the lift truck accessory is useful whenever these elements are installed above floor level or the switchgear is installed on a raised surface (such as a house keeping pad). For Shelter-Clad installations, the lift truck is normally stored in the aisle area as it does not conveniently pass through the aisle doorway.

Figure 47: Split plug jumper

Figure 48: Lift sling in use to handle circuit breaker

Lift sling

If a lift truck is not provided, a lift sling is supplied as standard when circuit breakers or fuse rollout trucks are installed above floor level. The lift sling is suitable for use with any crane that has adequate capacity (1,000 lbs or 454 kg minimum). Figure 48: Lift sling in use to handle circuit breaker shows a lift sling being used to lift a circuit breaker.

Annex

DANGER

Hazardous voltage.

Will cause death, serious injury and property damage.

This equipment contains hazardous voltages and may be controlled remotely. Severe personal injury or property damage can result if safety instructions are not followed. Only qualified personnel should work on or around this equipment after becoming thoroughly familiar with all warnings, safety notices and maintenance procedures for this equipment. The successful and safe operation of this equipment is dependent upon proper handling, installation, operation and maintenance.

Electrical racking device

Qualified personnel

For the purpose of these instructions, qualified personnel are defined as people familiar with the installation, construction and operation of this equipment and the hazards involved. In addition, they have the following qualifications:

1. They are trained and authorized to energize, de-energize, clear, ground, and tag circuits and equipment in accordance with established safety practices.
2. They are trained in the proper care and use of personal protective equipment such as rubber gloves, hard hat, safety glasses or face shields, flash clothing, etc., in accordance with established safety practices.

Purpose

The purpose of this document is to provide instructions for racking a type 38-3AH3 vacuum circuit breaker or a type 38-3AH3-GTD (EO) or type GM38T (MO) ground and test device within a circuit breaker compartment of the GM38 family of switchgear (GM38, SGM38 or OGM38) using the optional electrical racking device (ERD) accessory.

Description

The ERD can be supplied in a variety of configurations. The most basic is depicted in the photos and figures included in this document as the instructions (also present on labels on the device itself) are applicable to all configurations with only slight modifications.

The ERD consists of a motor drive assembly, which installs (without tools) on mounting brackets on the circuit breaker compartment front panel (door). The unit includes a power cord, which can be plugged into a duplex receptacle in the vicinity of the switchgear, plus a control cable, which allows the operator to control the racking operation from a distance.

Instructions

1. Review the appropriate Switchgear Operating and Instruction Manual for proper operation and safety procedures and make certain that the equipment is released for maintenance in an authorized manner.
2. Following the procedures outlined in this instruction manual, close and latch the circuit breaker compartment front panel.

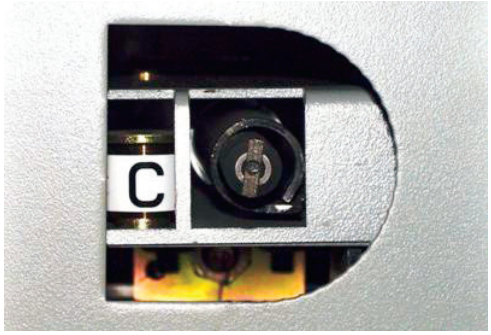

Figure 49: Compartment alignment slot

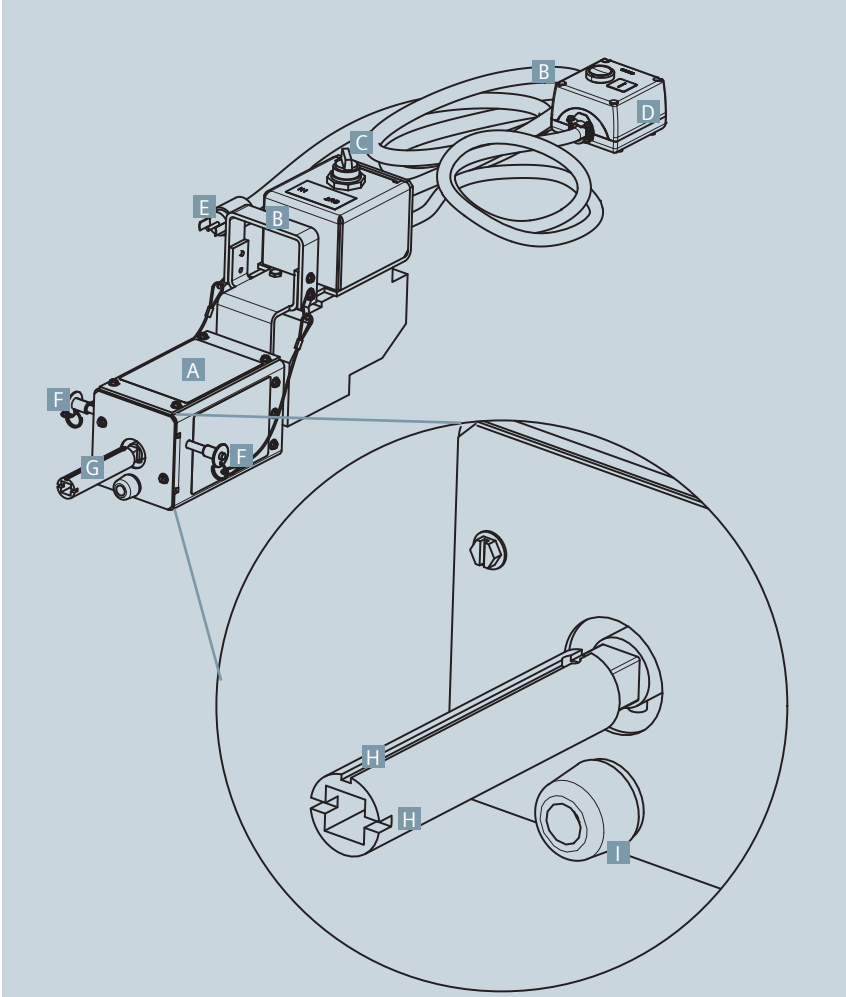

Item	Description
A	Motor drive
B	Handle
C	Selector switch
D	Control unit
E	Three-prong plug
F	Locking pins
G	Racking socket
H	Alignment slot
I	Bumper

Figure 50: Electrical racking device

3. Grasp the racking socket on the ERD by hand or with a 0.50 inch open-end wrench, and rotate the socket so that the alignment slot on the ERD (or the roll pin that attaches the racking socket to the motor drive) is aligned with the alignment slot on the tip of the drive screw of the compartment racking mechanism. This will align the flat surfaces of the racking socket with the flat surfaces on the racking screw.
4. Verify the position of the device to be racked (type 38-3AH3 circuit breaker, type 38-3AH3-GTD (EO) electrically operated ground and test device or type GM38T (MO) manually operated ground and test device. "C" is for connect. "D" is for disconnect.
5. Hold the ERD by the handle between the two brackets on the circuit breaker compartment front panel and push the ERD onto the racking screw.
6. Rotate the ERD (as required) to align the two attachment pins with the holes in the brackets on the circuit breaker compartment front panel. An open-end wrench is a convenient means to rotate the ERD shaft to align with the cubicle racking shaft.
7. Insert the locking pins into the ERD through the holes in the brackets to secure the ERD to the brackets on the circuit breaker compartment front panel. Note that the rubber bumper below the racking socket should be touching the compartment front panel.

8. Plug the power cord into a duplex receptacle in the vicinity of the switchgear.
9. Turn the selector switch to the desired position:

- "IN" to rack to the connect position from the disconnect position
- "OUT" to rack to the disconnect position from the connect position

10. Carry the hand-held control unit a safe distance away from the compartment with the device to be racked, but within hearing distance of the compartment.
11. Press and hold the activation button to activate the ERD and rack the device. If the button is released, the racking operation will cease. Failure to hold the button will deactivate the ERD.
12. When an audible clicking noise is heard, release the activation button to deactivate the ERD. The sound is produced by a torque limiter internal to the ERD that is set to disengage when the device is either fully racked in or out and to prevent damage to the compartment if an anomaly occurs during racking.
13. When racking a device out (to the disconnect position from the connect position), once the clutch disengages the motor and the activation button has been released, turn the selector switch to "IN" and bump the ERD to remove any tension on the racking screw the over-travel of the ERD may have caused due to the momentum of the device being racked.
14. Unplug the power cord from the duplex receptacle.
15. Remove the ERD from the circuit breaker compartment front panel.
16. Verify the position of the device that was racked by viewing the position indicator on the racking mechanism. "C" is for connect and "D" is for disconnect.

Figure 51: Electrical racking device

Table 7: Remarks

Table 7: Remarks (continued)

Siemens Industry, Inc.
7000 Siemens Road
Wendell, NC 27591

For more information, contact:
1-800-347-6659

www.usa.siemens.com/mvswitchgear

Subject to change without prior notice.
Order No.:
E50001-F710-A236-V3-4A00

Printed in USA