EMMS-T40051-05-4AUS

SIEBREAK™ and SIEBREAK-VCB™

Medium-voltage, metal-enclosed interrupter switchgear
instruction manual

SIEMENS

⚠ DANGER

Hazardous voltages and high-speed moving parts.

Will cause death, serious injury, or property damage.

Always de-energize and ground the equipment before maintenance. Read and understand this instruction manual before using equipment. Maintenance should be performed only by qualified personnel. The use of unauthorized parts in the repair of the equipment or tampering by unqualified personnel will result in dangerous conditions which will cause death, severe injury, or equipment damage. Follow all safety instructions contained herein.

Important

The information contained herein is general in nature and not intended for specific application purposes. It does not relieve the user of responsibility to use sound practices in application, installation, operation, and maintenance of the equipment purchased. Siemens reserves the right to make changes in the specifications shown herein or to make improvements at any time without notice or obligation. Should a conflict arise between the general information contained in this publication and the contents of drawings or supplementary material or both, the latter shall take precedence.

Qualified person

For the purpose of this instruction manual a **qualified person** is one who has demonstrated skills and knowledge related to the construction and operation of electrical equipment and installations and has received hazard safety training to identify the hazards and reduce the associated risk. In addition, this person has the following qualifications:

- **Is trained and authorized** to de-energize, clear, ground and tag circuits and equipment in accordance with established safety procedures.
- **Is trained** in the proper care and use of protective equipment, such as: rubber gloves, hard hat, safety glasses or face shields, flash clothing, etc. in accordance with established safety practices.
- **Is trained** in rendering first aid.
- **Is trained** in the methods of safe release of victims from contact with energized electrical conductors or circuit parts.

Further, a qualified person shall also be familiar with the proper use of special precautionary techniques, personal protective equipment, insulation and shielding materials, and insulated tools and test equipment. Such persons are permitted to work within limited approach boundary, and shall, at a minimum, be additionally trained in all of the following:

The skills and techniques necessary to distinguish exposed energized parts from other parts of electric equipment.

The skills and techniques necessary to determine the nominal voltage of exposed live parts.

The approach distances specified in NFPA 70E® and the corresponding voltages to which the qualified person will be exposed.

The decision-making process necessary to perform the job safety planning, identify the electrical hazards, assess the associated risks, and select the appropriate risk control methods including personal protective equipment.

Note:

These instructions do not purport to cover all details or variations in equipment, nor to provide for every possible contingency to be met in connection with installation, operation, or maintenance. Should further information be desired or should particular problems arise that are not covered sufficiently for the purchaser's purposes, the matter should be referred to the local sales office.

The contents of this instruction manual shall not become part of or modify any prior or existing agreement, commitment or relationship. The sales contract contains the entire obligation of Siemens Industry, Inc. The warranty contained in the contract between the parties is the sole warranty of Siemens Industry, Inc. Any statements contained herein do not create new warranties or modify the existing warranty.

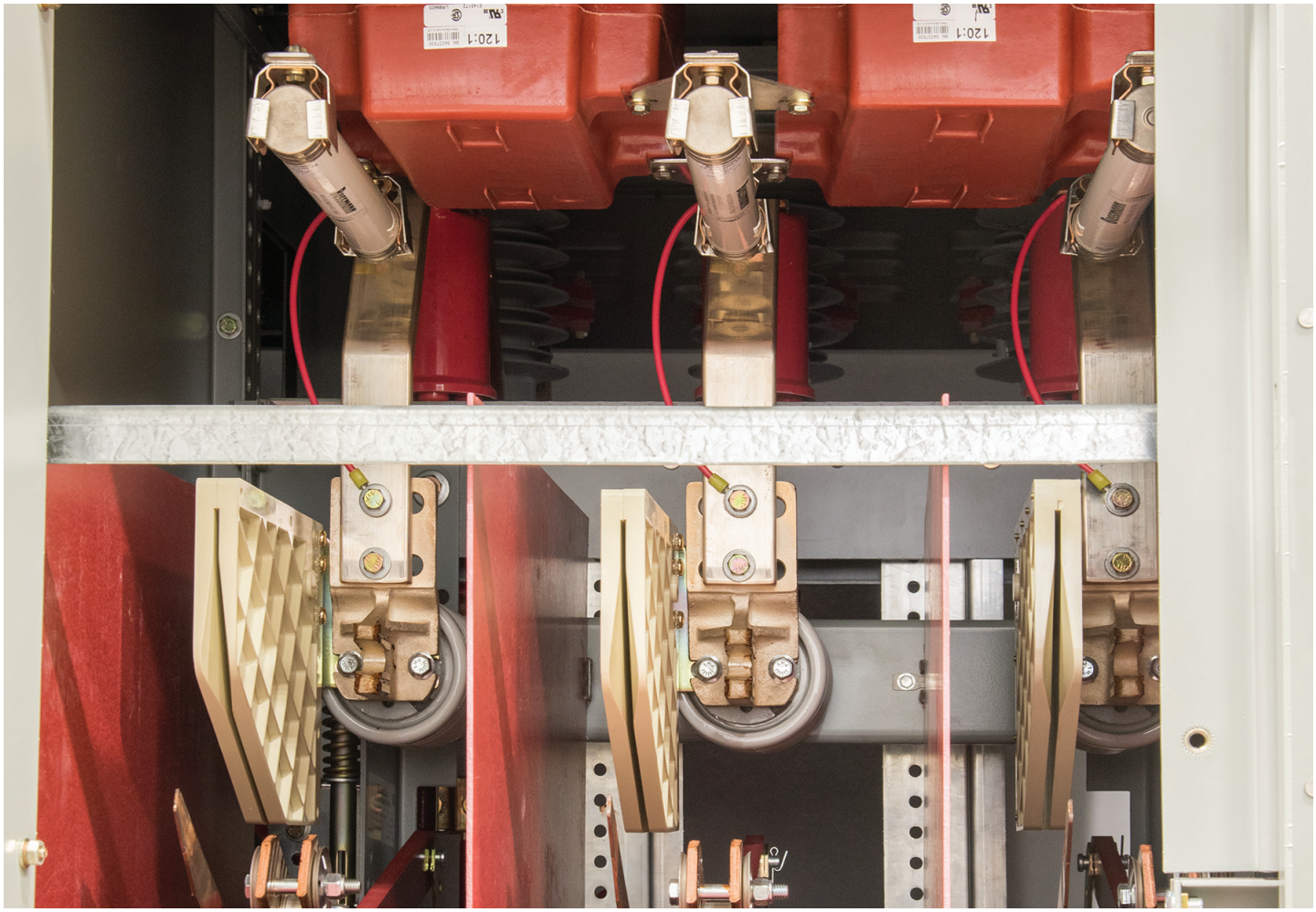

Index

SIEBREAK AND SIEBREAK-VCB

Introduction

DANGER

Hazardous voltages and high-speed moving parts.

Will cause death, serious injury, or property damage.

Always de-energize and ground the equipment before maintenance. Read and understand this instruction manual before using equipment. Maintenance should be performed only by qualified personnel. The use of unauthorized parts in the repair of the equipment or tampering by unqualified personnel will result in dangerous conditions which will cause death, severe injury, or equipment damage. Follow all safety instructions contained herein.

Introduction

The SIEBREAK family of medium-voltage metal-enclosed interrupter switchgear is designed to meet all applicable ANSI, NEMA, and IEEE standards.

Successful application and operation of this equipment depends as much upon proper installation and maintenance by the user as it does upon the proper design and fabrication by Siemens.

This equipment is not characterized as arc-resistant switchgear and has not been tested for resistance to internal arcing in accordance with ANSI/IEEE C37.20.7.

The purpose of this instruction manual is to assist the user in developing safe and efficient procedures for the installation, maintenance, and use of the equipment.

Note: This instruction manual does not apply to medium-voltage, metal-clad switchgear, which may be provided in the same overall assembly. If the equipment includes metal-clad switchgear, consult the instruction manual applicable to that equipment.

Contact the nearest Siemens representative if any additional information is desired.

Signal words

The signal words “danger,” “warning”, and “caution” used in this instruction manual indicate the degree of hazard that may be encountered by the user. These words are defined as:

Danger - Indicates an imminently hazardous situation that, if not avoided, will result in death or serious injury.

Warning - Indicates a potentially hazardous situation that, if not avoided, could result in death or serious injury.

Caution - Indicates a potentially hazardous situation that, if not avoided, may result in minor or moderate injury.

Notice - Indicates a potentially hazardous situation that, if not avoided, may result in property damage.

Field service operation and warranty issues

Siemens can provide competent, well-trained field service representatives to provide technical guidance and advisory assistance for the installation, overhaul, repair, and maintenance of Siemens equipment, processes and systems. Contact regional service centers, sales offices or the factory for details, or telephone Siemens field service at +1 (800) 347-6659 or +1 (423) 262-5700 outside the U.S.

For medium-voltage customer service issues, contact Siemens at +1 (800) 347-6659 or +1 (423) 262-5700 outside the U.S.

Note: In this manual, SIEBREAK is used to denote product family, which includes SIEBREAK load-interrupter switchgear with or without fuses, and SIEBREAK-VCB load-interrupter switchgear with fixed-mounted circuit breakers. In general, references to SIEBREAK denotes material applicable to all models, while information specifically relevant to the SIEBREAK-VCB variant is indicated as SIEBREAK-VCB.

SIEBREAK AND SIEBREAK-VCB

General description

Figure 1: Typical indoor SIEBREAK-VCB metal-enclosed interrupter switchgear section. Protective relay/control devices are optional unless supplied with a circuit breaker.

Introduction

Siemens SIEBREAK metal-enclosed interrupter switchgear is precision built equipment designed to function efficiently under normal operating conditions. It is designed and manufactured to operate within the parameters established in ANSI/IEEE C37 standards for metal-enclosed switchgear. Performance requirements of these standards have been met or exceeded by these designs. Specific standards which apply include ANSI/IEEE C37.20.3.

This equipment is not classified as arc-resistant switchgear and has not been tested for resistance to internal arcing in accordance with ANSI/IEEE C37.20.7.

The instructions included in this instruction manual are provided to aid you in obtaining longer and more economical service from your Siemens switchgear. For proper installation and operation, this information should be distributed to your operators and engineers.

By carefully following these instructions, difficulties should be avoided. However, these instructions are not intended to cover all details of variations that may be encountered in connection with the installation, operation, and maintenance of this equipment. Should additional information be desired, including replacement instruction manuals, please contact your local Siemens sales representative.

Scope

These instructions cover the installation, operation and maintenance of Siemens SIEBREAK metal-enclosed interrupter switchgear assemblies. The equipment designs described in this instruction manual include both indoor and non-walk-in outdoor configurations for applications up to 15 kV. A typical indoor switchgear assembly is shown in Figure 1: Typical indoor SIEBREAK-VCB metal-enclosed interrupter switchgear section.

All diagrams, descriptions, and instructions apply to all of the above classes and designs unless noted otherwise.

Standard construction details of the switchgear, main interrupting device, auxiliary equipment, and necessary accessories are given in the appropriate sections.

The equipment furnished has been designed to operate in a system having the circuit capacity specified by the purchaser. If for any reason the equipment is used in a different system or if the short-circuit capacity of the system is increased, the ratings of the equipment and the bus capacity must be checked. Failure on the part of the user to receive approval of intended changes from Siemens may cause the warranty to be void.

General description

The switchgear described in this instruction manual is metal-enclosed interrupter switchgear, as defined in ANSI/IEEE C37.20.3, and is designed to function efficiently under normal operating conditions. It is designed and manufactured to operate within the parameters established in ANSI/IEEE C37 standards for metal-enclosed interrupter switchgear.

This equipment is not classified as arc-resistant switchgear and has not been tested for resistance to internal arcing in accordance with ANSI/IEEE C37.20.7.

Siemens SIEBREAK metal-enclosed, interrupter switchgear is an integrated system of components arranged for convenient access within a common enclosure consisting of one or more free-standing structural sections to form a lineup. SIEBREAK switchgear can be used for protection and isolation of transformers, single or multi-circuit systems, or automatic-transfer schemes in medium-voltage distribution systems ranging from 2.4 kV to 15 kV with 600 A or 1,200 A load- interrupting ratings.

The SIEBREAK indoor sections are normally 36” (914 mm) wide, 92” (2,413 mm) tall with depths ranging from 56” to 72” (1,422 to 1,829 mm) depending upon the configuration.

Outdoor sections are similar except height increases to 105” (2,667 mm) and the minimum depth is 72” (1,829 mm). Non-walk-in outdoor switchgear consists of indoor switchgear enclosed in a weatherproof housing complete with a gasketed door, all on an elevated base.

SIEBREAK sections can be arranged to meet specific customer needs with the addition of auxiliary circuit devices and is typically arranged as shown in Figure 2: SIEBREAK switchgear arrangements.

The section features a single-throw, gang-operated, load-interrupter switch as a disconnect and/or circuit interrupter. The interrupter switch differs from a circuit breaker in that it will interrupt its full-rated load current, but it will not interrupt overload or fault currents. The switch is manually operated from outside of the enclosure by a spring-over-center, stored-energy operating mechanism through a chain drive and is equipped with arc chutes and quick-make blades. The quick-make closing and quick-break opening energy is supplied by 180 degree rotation of the operating handle resulting high-speed closing and opening assuring safe operation and long life.

To provide for personnel safety, the enclosure front door is mechanically interlocked with the position of the load-interrupter switch to prevent an operator from accessing a medium-voltage compartment in that vertical section if the switch is closed. In order to open the door to access the medium-voltage components, the load-interrupter switch must be open.

An eye-level inspection window is provided in the enclosure front door through which the position of the switch may be visually checked.

The switchgear may be unfused, equipped with either current-limiting or power (non-current-limiting) fuses, or a circuit breaker to provide fault-current interrupting capability.

All current-limiting fuses used on SIEBREAK switchgear are clip-lock fuses requiring no tools for quick and easily inspection or replacement. All expulsion (power) fuses are non-disconnecting indicating bolt-in type. All circuit breakers are fixed-mounted, vacuum circuit breakers with front-mounted operating mechanisms for ease of access for maintenance or inspection.

Optional main bus for lineup arrangements is located above the load-interrupter switch towards the front of the enclosure for easy access for installation and inspection.

User cable terminations within SIEBREAK are arranged to accept standard NEMA two-hole lugs for user cables entering the unit from either below or above, as specified. Cable connections are accessible from the rear of the section as standard or optionally from the front (except selector switches and outdoor switches). SIEBREAK sections for close coupling to either liquid-filled or dry-type transformers are also available.

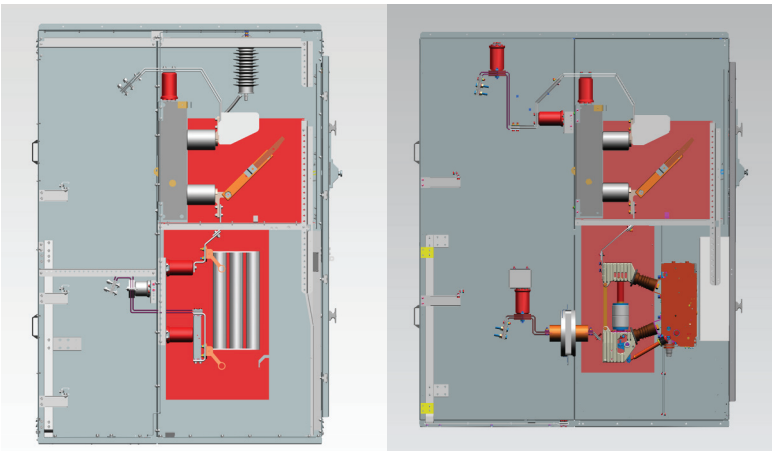

Switch-fuse (SIEBREAK) Switch-circuit breaker (SIEBREAK-VCB)

Figure 2: SIEBREAK switchgear arrangements

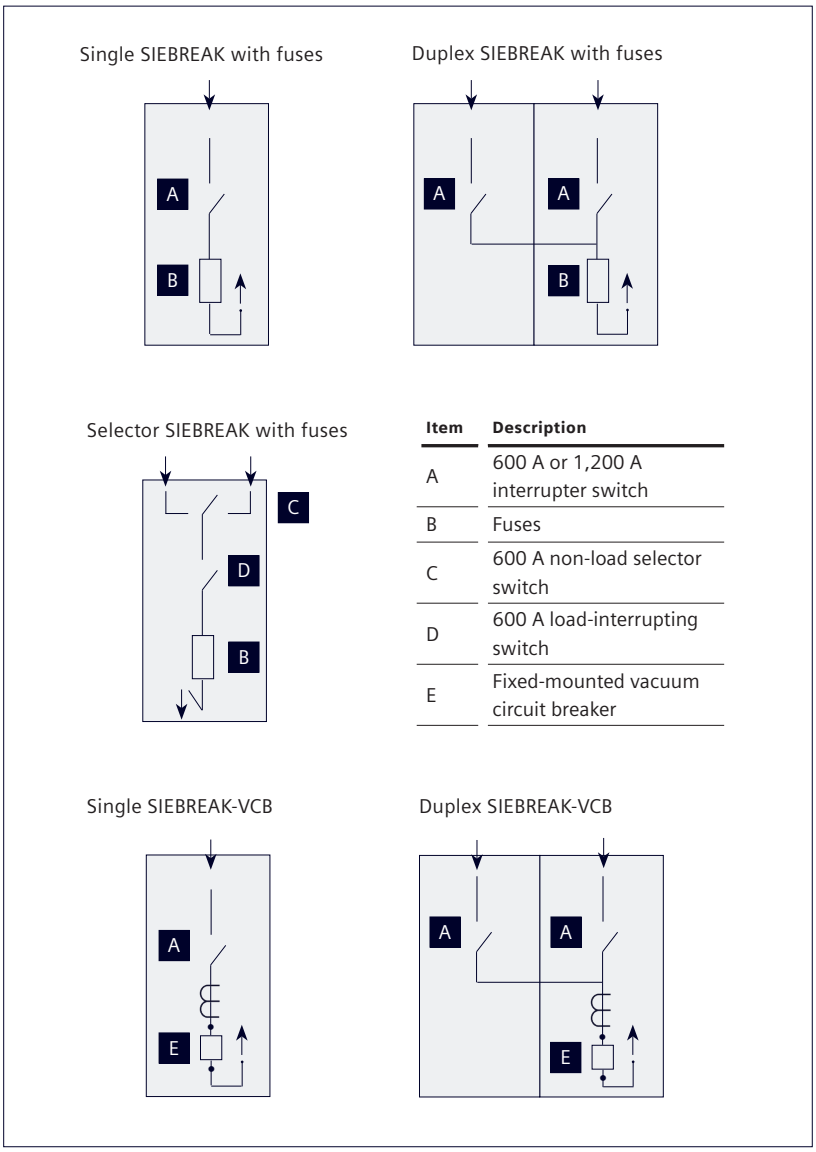

Item	Description
A	600 A or 1,200 A interrupter switch
B	Fuses
C	600 A non-load selector switch
D	600 A load-interrupting switch
E	Fixed-mounted vacuum circuit breaker

Figure 3: Typical SIEBREAK configurations

Optional auxiliary primary circuit devices are available for use in SIEBREAK sections including voltage or current transformers for monitoring system parameters, surge protection devices, and control power transformers to provide auxiliary power for operating circuit breakers or other protection or control devices or for operating anti-condensation space heaters. An optional low-voltage/control compartment with its own door is available to house the protection and control devices and is located on the door of the enclosure.

The SIEBREAK load-interrupter switchgear sections are available in three basic configurations as shown in Figure 3: Typical SIEBREAK configurations:

- **Standalone switch –** A two-position, load-interrupter switch (OPEN/CLOSED). Fuses or a circuit breaker (SIEBREAK-VCB) may also be included.
- **Dual-source applications (duplex) –** A pair of two-position load-interrupter switches with common load-side bus to provide selection between two incoming sources. Fuses or a circuit breaker (SIEBREAK-VCB) may also be included.
- **Dual-source applications (selector) –** A two-position 600 A load-interrupter switch in series with a two-position, non-load-interrupting disconnect switch (line one or line two). The disconnect switch is mechanically interlocked with the load-interrupter switch to prevent operation when the interrupter switch is closed. The load-interrupter switch is identical to the standalone switch unit and can interrupt its rated load current. The disconnect switch is mounted in the rear of the section and is operated from the front of the unit via an operating handle that is interlocked with the enclosure front door.

Ratings

SIEBREAK switchgear ratings shown in Table 1a: SIEBREAK ratings conform to the requirements of IEEE Std C37.20.3 for the switchgear, IEEE Std C37.09 for the circuit breaker, and IEEE Std C37.20.4 for the load-interrupter switch. The optional main bus (horizontal bus) continuous current ratings available are 600 A, 1,200 A, and 2,000 A.

Table 1a: SIEBREAK switchgear ratings

System design voltage kV	Dielectric withstand voltage		Main bus[1] continuous current A rms	Short-circuit current unfused kA sym	Fault-closing current unfused kA rms
	Power frequency withstand kV rms	Impulse kV peak			
5.0	19	60	600 1,200 2,000	25, 38	39, 59
15.0	36	95	600 1,200 2,000	25, 38	39, 59

Footnotes:

1. Main bus is not provided on single-unit arrangements.
2. CL-14 is a current-limiting fuse. RBA-400 is an explusion (power) fuse, rated up to 400E. RBA-800 is an expulsion (power) fuse, rated up to 720E.
3. Short-circuit current and closing and latching current are limited to the capabilities of the load-interrupter switch.
4. Closing and latching current is that of the circuit breaker and is based on the load-interrupter switch being in the CLOSED position.

Table 1b: SIEBREAK load-interrupter switchgear ratings

System design voltage kV	Dielectric withstand voltage		Continuous and load-interrupting current unfused A rms	Short-circuit current unfused kA sym	Fault-closing current unfused kA rms	Fuse type[2]	Interrupting (fused) kA sym	Fault closing (fused) kA sym
	Power frequency withstand kV rms	Impulse kV peak						
5.0	19	60	600 1,200	25, 38	39, 59	CL-14 RBA-400 RBA-800	50 37.4 37.4	78 58 58
15.0	36	95	600 1,200	25, 38	39, 59	CL-14 RBA-400 RBA-800	50 25 25	78 39 39

Table 1c: SBVCB vacuum circuit breaker ratings

System design voltage kV	Dielectric withstand voltage		Continuous current unfused A rms	Short-circuit current kA sym	Circuit breaker type	Closing and latching current[3] kA sym	Closing and latching current[3] kA rms
	Power frequency withstand kV rms	Impulse kV peak					
4.76	19	60	600 1,200	25	05-SBVCB-25-0600-65 05-SBVCB-25-1200-65	25	39
				38[3]	05-SBVCB-40-0600-104 05-SBVCB-40-1200-104	40[4]	59[4]
15.0	36	95	600 1,200	25	15-SBVCB-25-0600-65 15-SBVCB-25-1200-65	25	39
				38[3]	15-SBVCB-40-0600-104 15-SBVCB-40-1200-104	40[4]	59[4]

SIEBREAK AND SIEBREAK-VCB

Receiving, handling, and storage

Receiving

Each section or group of SIEBREAK switchgear is securely blocked and braced for shipment. It is wrapped, boxed, or covered as required by shipping conditions. If special handling is required, it is so indicated. As relatively delicate instruments, relays, and other devices may be included, the switchgear assembly must be handled carefully when unloading.

Identification

When the shipment includes more than one unit/shipping group or equipment for more than one location, marking tags are attached to each package for identification. The sales order number on the tag is also on the shipping list. The shipping list identifies the contents with the unit numbers included in the shipping group. Refer to the general arrangement drawing for the location of each unit within the group lineup. Use this information to simplify the assembly operation and save unnecessary handling.

Inspection and unpacking

Inspect the equipment as soon as possible after receipt for any damage that may have occurred in transit. Before unpacking, examine the package itself, as a damaged package may indicate damage to the contents of the package. Be careful when unpacking equipment. The use of sledge hammers and crowbars may damage the finish or the equipment itself and may void the warranty. Use nail pullers. After unpacking, examine equipment for any possible damage. Check the shipping manifest to be certain that all items have been received.

Note: If there is a shortage, make certain it is noted on the freight bill and contact the carrier immediately. Notify Siemens medium-voltage customer service +1 (800) 347-6659 (423-262-5700 outside the U.S.) of any shortage or damage.

Shipping damage claims

Important: The manner in which visible shipping damage is identified by consignee prior to signing the delivery receipt can determine the outcome of any damage claim to be filed.

Notification to carrier within 15 days for concealed damage is essential if loss resulting from unsettled claims is to be eliminated or minimized.

1. When shipment arrives, note whether equipment is properly protected from the elements. Note trailer number on which the equipment arrived. Note blocking of equipment. During unloading, make sure to count the actual items unloaded to verify the contents as shown on the delivery receipt.
2. Make immediate inspection for visible damage upon arrival and prior to disturbing or removing packaging or wrapping material. This should be done prior to unloading when possible. When total inspection cannot be made on vehicle prior to unloading, close inspection during unloading must be performed and visible damage noted on the delivery receipt. Take pictures if possible.
3. Any visible damage must be noted on the delivery receipt and acknowledged with the driver's signature. The damage should be detailed as much as possible. It is essential that a notation "possible internal damage, subject to inspection" be included on delivery receipt. If the driver will not sign the delivery receipt with damage noted, the shipment should not be signed for by the consignee or their agent.
4. Notify Siemens immediately of any damage, at +1 (800) 347-6659 or +1 (423) 262-5700 outside the U.S.
5. Arrange for a carrier inspection of damage immediately.

Important: Do not move equipment from the place it was set when unloading. Also, do not remove or disturb packaging or wrapping material prior to carrier damage inspection. Equipment must be inspected by carrier prior to handling after receipt. This eliminates loss due to claims by carrier that equipment was damaged or further damaged on site after unloading.

6. Be sure equipment is properly protected from any further damage by covering it properly after unloading.
7. If practical, make further inspection for possible concealed damage while the carrier's inspector is on site. If inspection for concealed damage is not practical at the time the carrier's inspector is present, it must be done within 15 days of receipt of equipment. If concealed damage is found, the carrier must again be notified and inspection made prior to taking any corrective action to repair. Also notify Siemens immediately at +1 (800) 347-6659 or +1 (423) 262-5700 outside the U.S.
8. Obtain the original of the carrier inspection report and forward it along with a copy of the noted delivery receipt to Siemens at +1 (800) 347-6659 or +1 (423) 262-5700 outside the U.S. Approval must be obtained by Siemens from the carrier before any repair work can be performed. Before approval can be obtained, Siemens must have the above referenced documents. The carrier inspection report and/or driver's signature on the delivery receipt does not constitute approval to repair.

Note: Shipments are not released from the factory without a clear bill of lading. Approved methods are employed for preparation, loading, blocking, and tarping of the equipment before it leaves the Siemens factory. Any determination as to whether the equipment was properly loaded or properly prepared by shipper for over-the-road travel cannot be made at the destination. If the equipment is received in a damaged condition, this damage to the equipment must have occurred while en route due to conditions beyond Siemens' control. If the procedure outlined above is not followed by the consignee, purchaser, or their agent, Siemens is not liable for repairs. Siemens is not liable for repairs in any case where repair work was performed prior to authorization from Siemens.

⚠ WARNING

Heavy weight.

Can result in death, serious injury, or property damage.

Observe all handling instructions in this instruction manual to prevent tipping or dropping of equipment.

Indoor equipment handling

There are a number of methods that can be used in handling SIEBREAK switchgear that, when properly employed, will not damage the equipment. The handling method used will be determined by conditions and available equipment at the installation site. Before removing the protective packing materials, the switchgear sections may be moved by crane with lift cables attached through the packaging to the lifting plates on the top of the equipment.

Lifting with a crane is the preferred method of handling; however, overhead obstructions or low ceilings often dictate that other methods must be used. If crane facilities are unavailable, or if tight spaces prevent use of a crane, rollers, jacks, or forklift trucks under the wooden shipping skids may be used.

Indoor SIEBREAK switchgear is shipped in groups of one to four vertical sections mounted on wooden shipping skids and wrapped, boxed, or covered. Each group has provisions for attaching lifting equipment as shown in Figure 4: Lifting indoor SIEBREAK switchgear with a crane on page 12 at the ends and at the joint between each section. Though the lift points vary in location depending upon the number of sections in a shipping group, all are designed for use with a crane of adequate height and capacity. To estimate the maximum required crane capacity, multiply the number of sections to be lifted by 1,450 lbs (685 kg) for switch-fuse sections (SIEBREAK) and 2,500 (1,134 kg) for switch-circuit breaker (SIEBREAK-VCB) sections.

A drawing pocket (or holder) is provided with each lineup or single section of switchgear. This drawing pocket includes a general arrangement drawing of the equipment, plus information on handling and installing the equipment.

⚠ WARNING

Heavy weight.

Can result in death, serious injury, or property damage.

Observe all handling instructions in this instruction manual to prevent tipping or dropping of equipment.

Figure 4: Lifting indoor SIEBREAK switchgear with a crane

Figure 5: Retractable lifting eye

The drawing pocket is normally located at the left end of indoor lineups, or on the front door of units connected to transformers, or inside the front door for outdoor units. Review this information carefully before moving the equipment.

The following precautions must be taken whenever moving SIEBREAK units:

1. Handle the switchgear with care to avoid damage to components and to the frame or its finish.
2. Do not remove the wooden shipping skid until final installation position is reached.
3. Handle the unit in an upright position only. SIEBREAK units may be front heavy, and frequently top heavy. Balance the load carefully and steady the switchgear, if necessary, during movement. Some units may contain heavy equipment, such as transformers, which can be adversely affected by tilting.
4. Know the capabilities of the moving means available to handle the weight of the switchgear. Adequate handling facilities should be available.
5. It is recommended that a crane or hoist be used to handle the switchgear if at all possible. If a crane or hoist is not available, and other handling means are necessary, extreme care must be exercised to insure that the equipment is secured during the movement and placement operations to prevent tipping and falling. Jacks, pry bars, dollies, roller lifts, and similar devices all require supplemental blocking beneath the switchgear, and restraints to prevent tipping. These devices are not recommended due to the hazards implicit in their use.

Lifting and moving indoor switchgear with a crane

The recommended lifting method for indoor SIEBREAK switchgear is by means of lifting cables connected to an overhead crane. The lifting cables should be connected to the lifting eyes in the top of the switchgear using properly rated shackles. The retractable lifting eyes do not require tools to raise them for attaching the shackles as shown in Figure 5: Retractable lifting eye. The lifting eyes are retractable to reduce the height of the switchgear sections when transporting them on the wooden shipping skids.

One set of lifting eyes is located at the front of the switchgear, while another set of lifting eyes is located at the rear, as illustrated in Figure 4. A crane with sufficient height should be used so the load angle (from horizontal) on the lifting cables will be at least 45 degrees when viewed from the front or the rear. A lesser angle could cause the equipment to be damaged and will require the lifting cables to have spreaders from front-to-rear and side-to-side to prevent twisting the lift plates.

The following precautions should be taken when moving the switchgear with a crane or hoist:

1. Select rigging lengths to compensate for any unequal weight distribution.
2. Do not allow the angle between the lifting cables and vertical to exceed 45 degrees.
3. Do not pass ropes or cables through the lifting holes. Use only slings with safety hooks or shackles.
4. If overhead restrictions do not permit lifting by top-mounted lifting eyes, the switchgear may be under slung from the base. The sling load must be distributed evenly and padding or spreader bars must be used to avoid scarring and structural damage.

Note: Never lift the switchgear above an area where personnel are located.

Moving indoor switchgear in areas without a crane

Within buildings and obstructed areas where a crane cannot be used, move the switchgear with rollers, cribbing, jacks, and other such equipment as may be required to meet the situation. Forklift trucks should be used with discretion as improper lift points could cause extreme damage to equipment. For this reason, use of a forklift truck to handle or move SIEBREAK sections is not recommended. Jacks may be used to lift equipment that is properly supported by sturdy timbers. To prevent distortion of the sections, rollers, and cribbing of equal height must be used in sufficient number to evenly distribute the load. Figure 6 shows a method of using jacks with SIEBREAK switchgear to facilitate the use of rollers under the shipping skid. Care must be used to prevent damage to instruments, relays, and devices, and to maintain the stability of the timbers. Remove rollers and lower the switchgear carefully. Leave wooden skids (when provided) in place during moving operation until final location is reached.

The following precautions should be taken when moving the switchgear by rolling on pipes:

1. Keep the switchgear in an upright position.
2. Use enough people and restraining devices to prevent tipping.
3. The surface over which the switchgear is to be rolled must be level, clean, and free of obstructions. Never roll switchgear on an inclined surface.
4. It should be recognized that rolling switchgear is especially hazardous to fingers, hands, and feet and the switchgear is susceptible to tipping. Measures should be taken to eliminate these hazards.
5. All pipes must be the same outside diameter and should have no flat spots. Only steel pipe should be used for this purpose.

⚠ WARNING

Heavy weight.

Can result in death, serious injury, or property damage.

Observe all handling instructions in this instruction manual to prevent tipping or dropping of equipment.

Figure 6: Moving indoor SIEBREAK switchgear with jacks and rollers

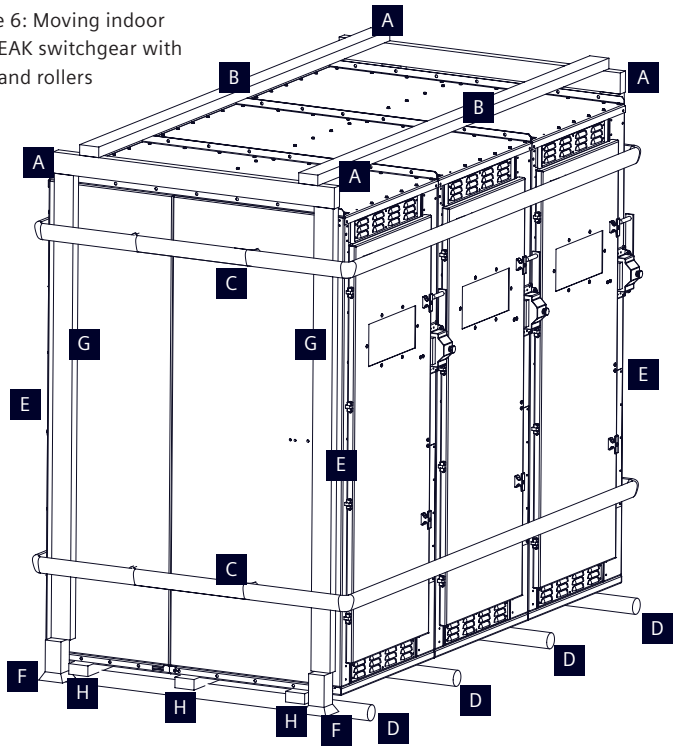

Item	Description
A	Secure lift beams to lifting eyes
B	Lift beams
C	Banding
D	Rollers (under support timber)
E	Provide suitable protection for all corners
F	Jack
G	Jack beam
H	Support timber (between switchgear and rollers)

⚠ WARNING

Heavy weight.

Can result in death, serious injury, or property damage.

Observe all handling instructions in this instruction manual to prevent tipping or dropping of equipment.

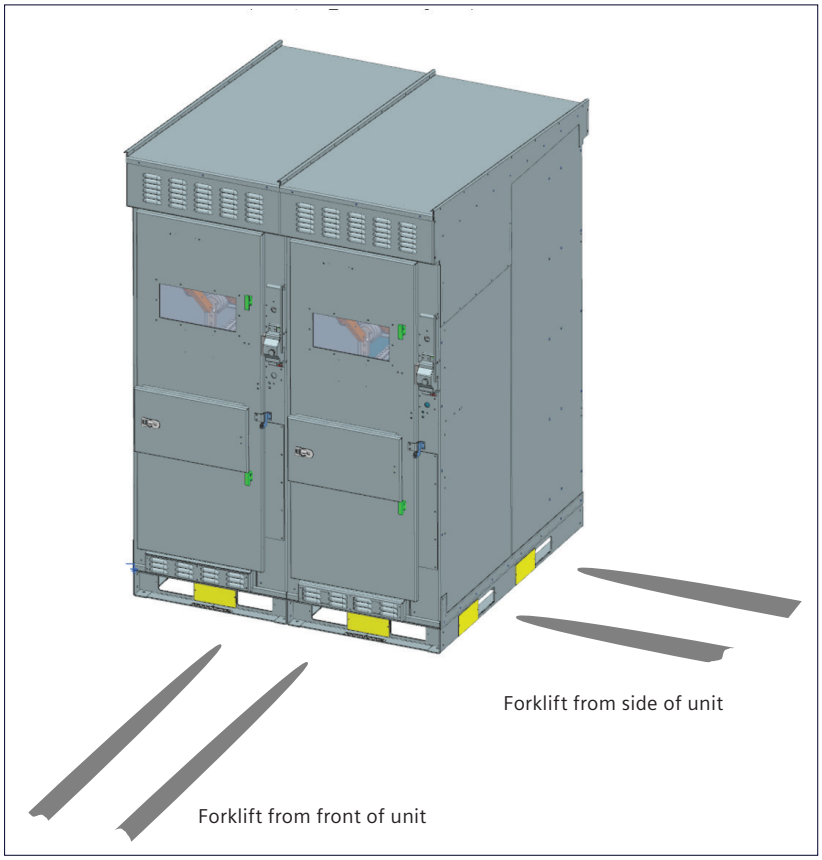

Figure 7: Moving SIEBREAK switchgear with forklift

The following precautions should be taken when moving the switchgear with a forklift:

1. Keep the switchgear in an upright position only.
2. Make sure the load is properly balanced on the forks.
3. Place protective material between the switchgear and forklift to prevent bending and scratching.
4. Securely strap the switchgear to the forklift to prevent shifting or tipping.
5. Excessive speeds and sudden starts, stops, and turns must be avoided when handling the switchgear.
6. Lift the switchgear only high enough to clear obstructions on the floor.
7. Take care to avoid collisions with structures, other equipment, or personnel when moving the switchgear. Never lift the switchgear above an area where personnel are located.

Lifting and moving outdoor switchgear with a forklift

1. The forklift outdoor enclosure base is designed for lifting from the front or the side using the appropriate heavy-duty forklift. The following include the steps for performing this offloading and handling the SIEBREAK shipping groups.
2. Rectangle openings are located in the front, rear and sides of the enclosure base for lifting the shipping group.
3. Select the appropriate heavy-duty forklift according to the weight capacity requirements, and the length of the forks.
4. The forks must extend the entire depth of the enclosure when lifted from the front, and the entire width of the shipping group when lifted from the side.
5. The spacing of the forks must be set based on the total width of the shipping group and the spacing of the rectangle openings when lifted from the front to ensure balance during the lifting process.

6. After the panels are installed, install the cover places over the rectangle openings to prevent small animals and creatures from entering the enclosure base.

Final movement of switchgear assembly

Removal of the wooden shipping skid should be performed just prior to final placement of the switchgear and is achieved by removing the skid's lag bolts. Do this by first attaching a crane or suitable lifting device to the lifting eyes (or properly supported blocks and jacks) and then hoisting the switchgear to remove all slack without lifting the equipment. This is a recommended safety measure to reduce the possibility of tipping. The lag bolts may now be removed and the switchgear can be lifted and the skids removed.

Proper final movement of the switchgear (and connection of multiple sections to form a lineup) requires that several items be completed (refer to Figure 8):

1. Preplan the sequence of installation movements and any connections that must be made.
2. Where multiple sections of equipment must be slid into final location to form a lineup, start with an end shipping group and continue in sequence. Secondary conduits which stub-up above floor level may block sliding.
3. Protect equipment and external items (for example, instruments, relays, etc.) from damage during movement.
4. Be sure to have smooth, unobstructed surfaces where the equipment is to be slid.
5. Keep access openings clear.
6. Prepare for the connections across shipping splits of lineups before the equipment is moved into its final position. Bus-joint boots (if applicable) should be removed using side, and front-access options as required. Note the mounting position and orientation and save hardware for use in re-installation.
7. Thread coiled wires across shipping splits into inter-unit wire trough prior to moving equipment into its final position.

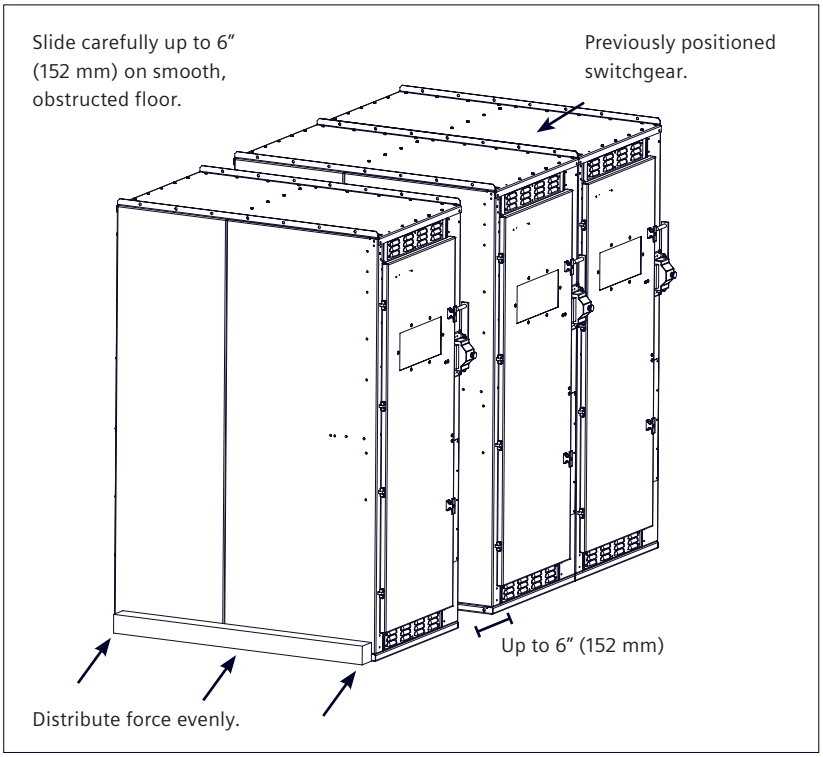

Figure 8: Moving outdoor SIEBREAK switchgear in obstructed area without a crane or for final positioning

Once the switchgear is in its final position, the switchgear can be lowered into place, and the anchor bolts secured.

Note: This operation should be performed with adequate rigging tension to prevent tipping.

After all additional shipping sections are secured in a similar manner, sections and bus bars should be joined in accordance with instructions in the Installation section of this instruction manual starting on page 17. Close all doors and panels as soon as possible to eliminate entrance of dirt and foreign materials into the enclosure.

Storage – indoor switchgear

When switchgear is not to be installed immediately, it should be unpacked, inspected within 15 days of receipt, and stored in a clean, dry location. Preferably, it should be stored in a heated building, with adequate air circulation, and protected from mechanical damage, dirt, and water. If it is to be kept in a humid or unheated area, provide an adequate covering and place a heat source of approximately 150 watts output within each section to prevent condensation.

If the switchgear is to be stored for any length of time prior to installation, leave the packing intact until the switchgear is at the final installation position. If the packing is removed, cover the top and openings of the equipment during the construction period to protect them against dust and debris.

Indoor equipment is neither weather-resistant nor drip-resistant. Therefore, it should be stored indoors. Outdoor storage is not recommended. However, if indoor switchgear must be stored outdoors, it should be securely covered for protection from weather conditions and dirt. Energize the space heaters provided within the sections and make certain that louvers and vents are uncovered to allow air to circulate. All loose packing or flammable materials should be removed before energizing space heating equipment. Any scratches or gouges suffered from shipping or handling should be touched up with spray paint to prevent corrosion.

Storage – outdoor switchgear

When it is necessary to store outdoor switchgear in a location exposing it to the weather or in a humid location, energize the space heaters provided within the sections and make certain that louvers and vents are uncovered to allow air to circulate. All loose packing or flammable materials should be removed before energizing space heating equipment. If at all possible, erect the switchgear at the permanent location even though it may be some time before the equipment is used. If the equipment cannot be erected at the permanent location immediately, cover shipping splits to protect from the elements.

Regardless of which method of storage is used, energize the space heaters. Access to the heater circuit is gained by opening the front door of the enclosure. Refer to wiring diagram drawing for space heater circuit connections. Cover all equipment for protection from the weather.

SIEBREAK AND SIEBREAK-VCB

Installation

Preparation for installation

Installation shall be in accordance with the National Electrical Code® (NFPA 70®). Unless the switchgear has been designed for unusual service conditions, it should not be located where it will be exposed to ambient temperatures above 104 °F (40 °C), corrosive or explosive fumes, dust, vapors, dripping or standing water, abnormal vibration, shock, tilting, or other unusual operating conditions.

Prior to installation of switchgear, study this instruction manual and the switchgear drawings, such as general arrangement, three-line diagram, schematic diagrams, wiring diagrams, nameplate engraving list, and accessories drawing.

Careful design, planning, and construction of the foundation or base on which the switchgear will rest must be made. A thorough analysis and careful construction may alleviate many problems at the time of installation and during operation.

Foundation: general requirements

It is important that a true and level surface be provided that is capable of supporting the weight of the switchgear and other related equipment. Special attention should be given to the foundation information contained in this instruction manual as well as the information provided on the equipment drawings. Be sure that the foundation conforms to the requirements described in this instruction manual and the general arrangement drawing.

Prior to installation of the switchgear, if the switchgear cannot be lowered over conduits because of headroom or other restrictions, conduit couplings may be grouted in flush with the foundation, and conduit nipples added after the switchgear is in place. Conduits should be capped during construction to prevent entry of dirt, moisture, and vermin.

All sill channels, bed plates, shims, and anchoring hardware are furnished by purchaser unless covered by contract.

If environmental conditions at the installation site require special anchoring provisions (for example, severe seismic requirements), those details will be shown on the drawings of the equipment and are not detailed in this instruction manual.

Floor plans of various available SIEBREAK switchgear configurations are shown in Figure 9: Typical floor plans for SIEBREAK switchgear on page 18.

Note: These typical floor plans should not be used for construction, as not all SIEBREAK sections have the same layout as these typical floor plans. Use the only the certified drawings (not approval drawings) provided for the specific order for construction purposes.

Figure 9: Typical floor plans for SIEBREAK switchgear

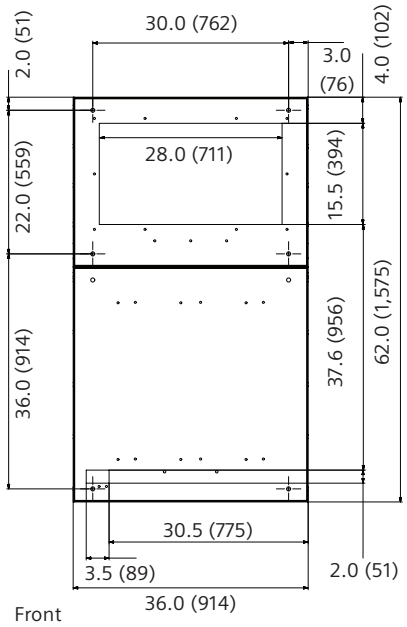

36” (914) wide, 62” (1,575 mm) deep floor plan

SIEBREAK or SIEBREAK-VCB

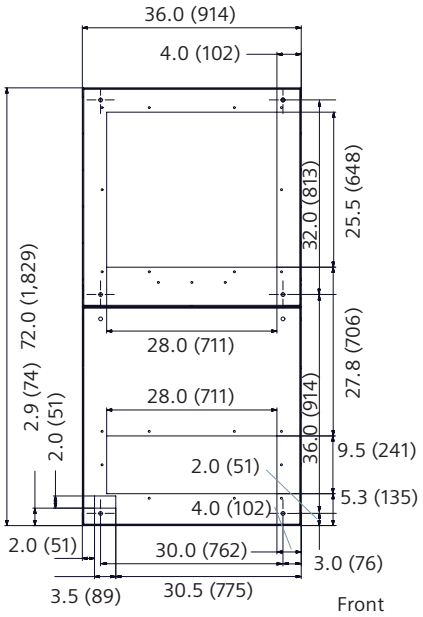

36” (914), wide 72” (1,829) deep floor plan

SIEBREAK fused or non-fused

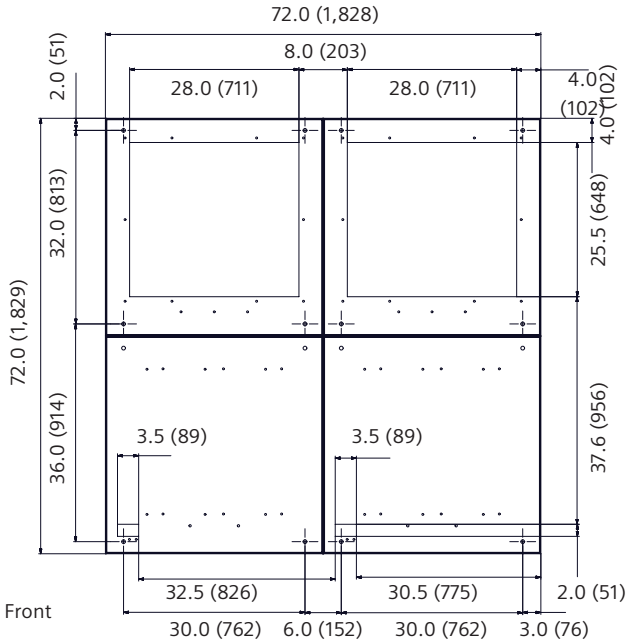

72” (1,829), wide 72” (1,829) deep duplex floor plan

SIEBREAK or SIEBREAK-VCB

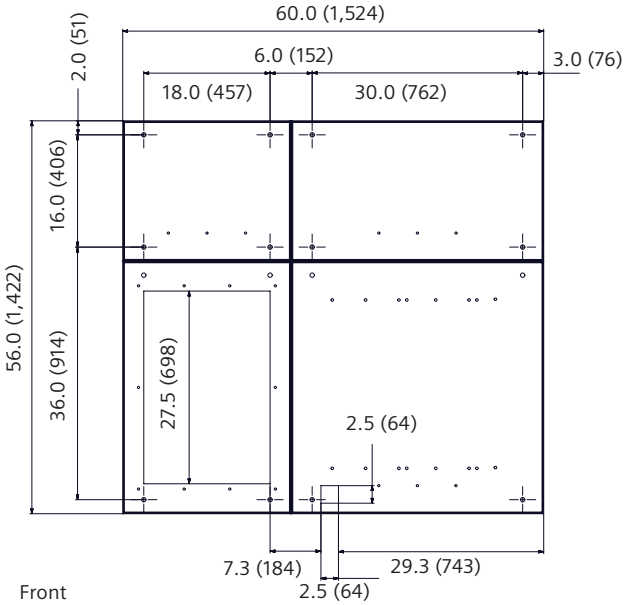

60” (1,524), wide 56” (1,422) deep floor plan

SIEBREAK or SIEBREAK-VCB

Figure 10: Anchoring indoor SIEBREAK switchgear

60” (1,524) wide, 56” (1,422) deep anchoring

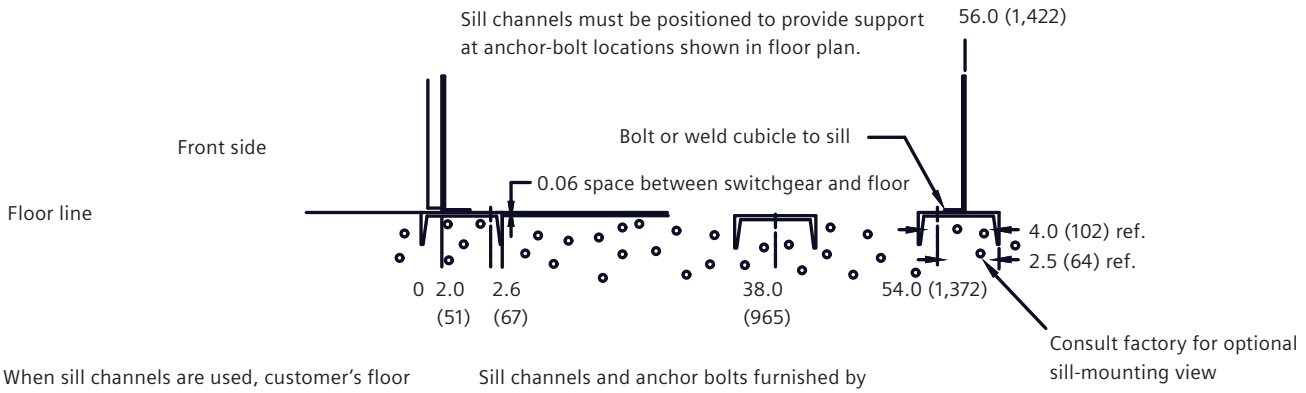

When sill channels are used, customer’s floor must not project above mounting surface or channels at any point within the floor area covered by the switchgear cubicles.

Sill channels and anchor bolts furnished by customer unless covered by contract.

Conduit height not to exceed 1.5” (38) above floor line.

60” (1,524) wide, 62” (1,575) deep anchoring

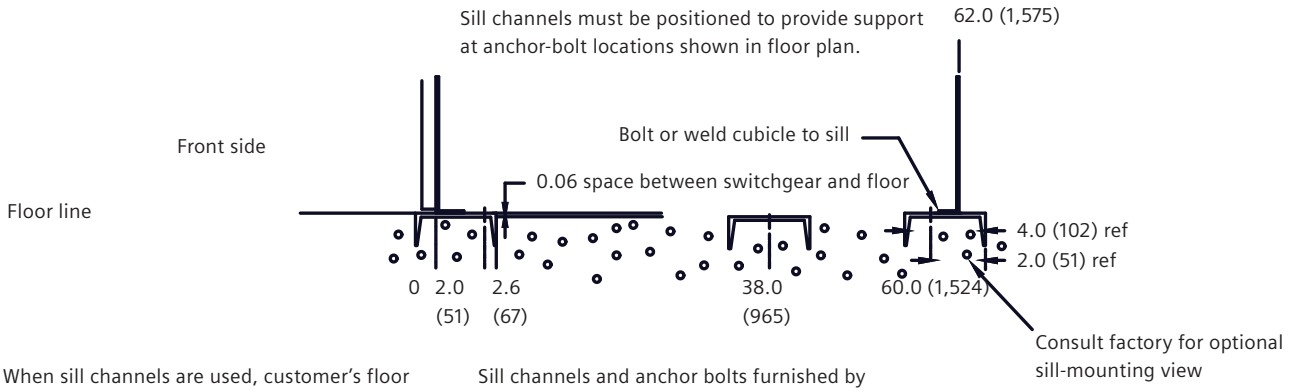

When sill channels are used, customer’s floor must not project above mounting surface or channels at any point within the floor area covered by the switchgear cubicles.

Sill channels and anchor bolts furnished by customer unless covered by contract.

Conduit height not to exceed 1.5” (38) above floor line.

60” (1,524) wide, 72” (1,829) deep anchoring

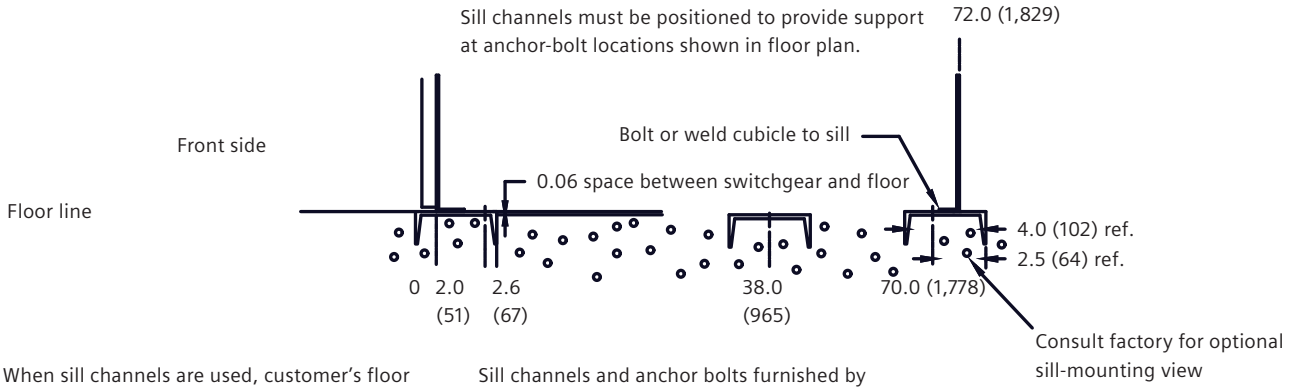

When sill channels are used, customer’s floor must not project above mounting surface or channels at any point within the floor area covered by the switchgear cubicles.

Sill channels and anchor bolts furnished by customer unless covered by contract.

Conduit height not to exceed 1.5” (38) above floor line.

Indoor foundations

As it is difficult to obtain a true and level floor on a concrete slab, it is highly recommended that 3" minimum (76 mm) sill channels be grouted into the floor as shown in Figure 10. The surface of the sills should be slightly above floor level. The surfaces of the sills must be level and in the same horizontal plane within 0.06" (1.6 mm). There should be no projection above this plane within the area covered by the switchgear. If the floor or sills do not meet this requirement, it will be necessary to use shims when installing the switchgear on the mounting surface.

Note: These typical anchoring diagrams should not be used for construction, as not all SIEBREAK sections have the same layout as these typical anchoring diagrams. Use the only the certified drawings (not approval drawings) provided for the specific order for construction purposes.

Figure 10 illustrates the location for sill channels for anchoring indoor switchgear. Sections may be anchored to sills by use of .5" (12 mm) diameter anchor bolts or welded in position.

Any conduits that are installed in concrete must be perpendicular to the switchgear mounting surface. Conduits should extend a minimum of 0.75" (19 mm) to a maximum of 1.5" (38 mm) above the mounting surface. This will allow the conduit to enter the section and exclude entry of water and rodents.

If the switchgear cannot be lowered over conduits because of headroom or other restrictions, conduit couplings may be grouted in flush with foundation, and conduit nipples added after the switchgear is in place.

Conduits should be capped during construction to prevent entry of dirt, moisture, and vermin.

Outdoor foundations

Whichever type of foundation is used (for instance, concrete slab, sill channels, piers, or pilings), it must have smooth and level surfaces. Surfaces supporting the switchgear sections must be in the same horizontal plane within 0.06" (1.6 mm). If these conditions are not met, it will be necessary to use shims when installing the switchgear.

For outdoor switchgear lineups, support shall be provided at each end and at the side of every second section and at shipping splits. Refer to Figure 12: Anchoring outdoor type SIEBREAK switchgear on pages 22-23, and the switchgear general arrangement drawing for locations of support and anchoring points.

If pilings are used, the diameter is to be determined by purchaser; however, they should not be less than 12" (305 mm) diameter for sufficient contact, room for anchor bolts and grouting in of bed plates (if used). All shipping splits must be properly supported.

Any conduits that are installed in concrete must be perpendicular to the switchgear mounting surface. Conduits should extend a minimum of 6.75" (171 mm) to a maximum of 7.5" (190 mm) above the mounting surface. This will allow the conduit to enter the section and exclude entry of water and rodents. Exception: If switchgear will be throat connected to a power transformer, refer to Installing switchgear with throat connection to power transformer on page 21 for restrictions on height of conduits for both primary and secondary conduits.

Refer to the detail on use of conduit couplings and conduit nipples, shown in Figure 12: Anchoring outdoor SIEBREAK switchgear on pages 22-23 for suggested use of conduit couplings and conduit nipples to ease installation. Conduits with conduit couplings can be embedded in the foundation concrete slab with temporary cap on the coupling to prevent entrance of construction debris. After the switchgear is placed on the foundation, the cap can be removed from the coupling, and the removable cable opening cover drilled to fit the conduit locations and the cover then reinstalled. Then a conduit nipple can be installed to bring the final conduit elevation to 6.75-7.5" (171-190 mm) above the switchgear mounting surface.

Important: In the switchgear primary entrance area, steel reinforcing rods or mesh in concrete must not pass through the space shown on the general arrangement drawing, even though cored or bored holes in concrete may miss rods or mesh. A single phase of a system should not be encircled by ferrous metals. (Reference NFPA 70E (NEC), section 300.20.A)

Welding the steel base or sill channels to a steel floor plate is an alternate mounting method especially recommended in areas subject to seismic (earthquake) activity.

Any gaps around the entire base of the equipment between the switchgear enclosure and the support foundation should be filled. Due to variable surface conditions at installation sites, this is needed to reduce the possibility of vermin entry. Asphaltic or epoxy materials should be suitable, especially if the gaps are significant. For small gaps, commonly available RTV silicone caulk is suitable.

Installing switchgear with throat connection to power transformer

When a transformer is connected to switchgear using a throat connection, the switchgear should be positioned next to the transformer as shown in Figure 12. It is very desirable that the switchgear be placed in position before positioning the transformer.

If the transformer must be positioned first, conduit couplings should be provided in the switchgear foundation so that the conduits do not extend more than 2" (51 mm) above the switchgear mounting surface.

The switchgear should be positioned near the transformer and just high enough to clear the secondary conduits but low enough so that the throat on the switchgear will clear the opening in the transformer terminal chamber (throat).

Move the switchgear toward the transformer until the switchgear throat just makes contact with the transformer throat and the switchgear anchor bolts and conduits are correctly aligned. With all points now in alignment, conduit caps and floor plate conduit covers removed carefully lower the switchgear into its permanent position.

After all leveling and anchoring operations for the switchgear are complete, draw the switchgear throat into place against the transformer throat. Tighten the throat hardware only enough to compress the gasket.

Installing shipping sections

The proper erection method depends on whether the units are shipped as one complete group, or in two or more shipping groups. In any case, the general arrangement drawing will indicate the shipping groups, and their location within the lineup. Units are assembled in accordance with the general arrangement.

Before setting and erecting the sections, determine the correct location of each shipping group on the general arrangement drawing. Sweep the mounting surface to remove all dirt and debris

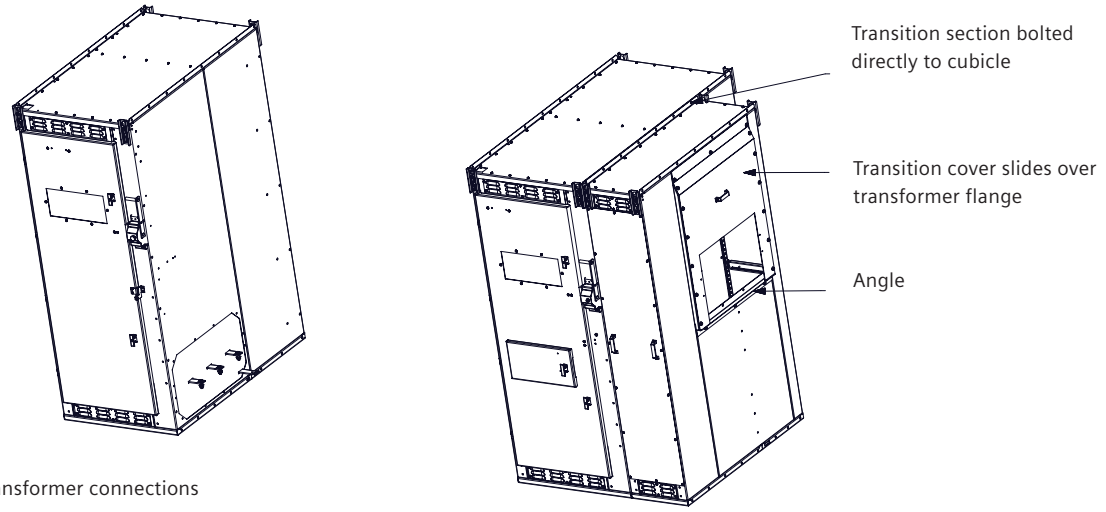

Figure 11: Transformer connections

Figure 12: Anchoring outdoor SIEBREAK switchgear

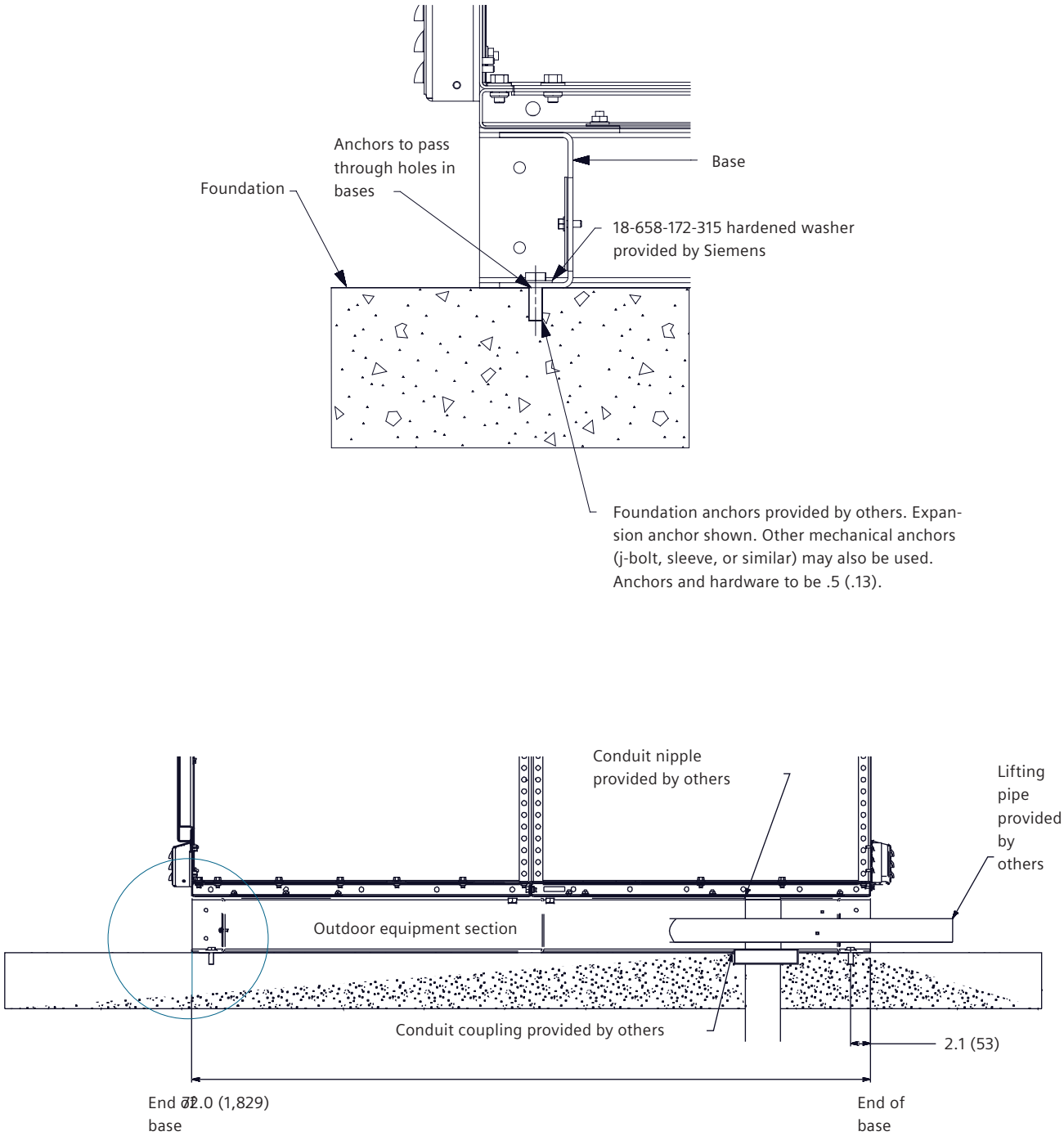

Figure 12: Anchoring outdoor SIEBREAK switchgear (continued)

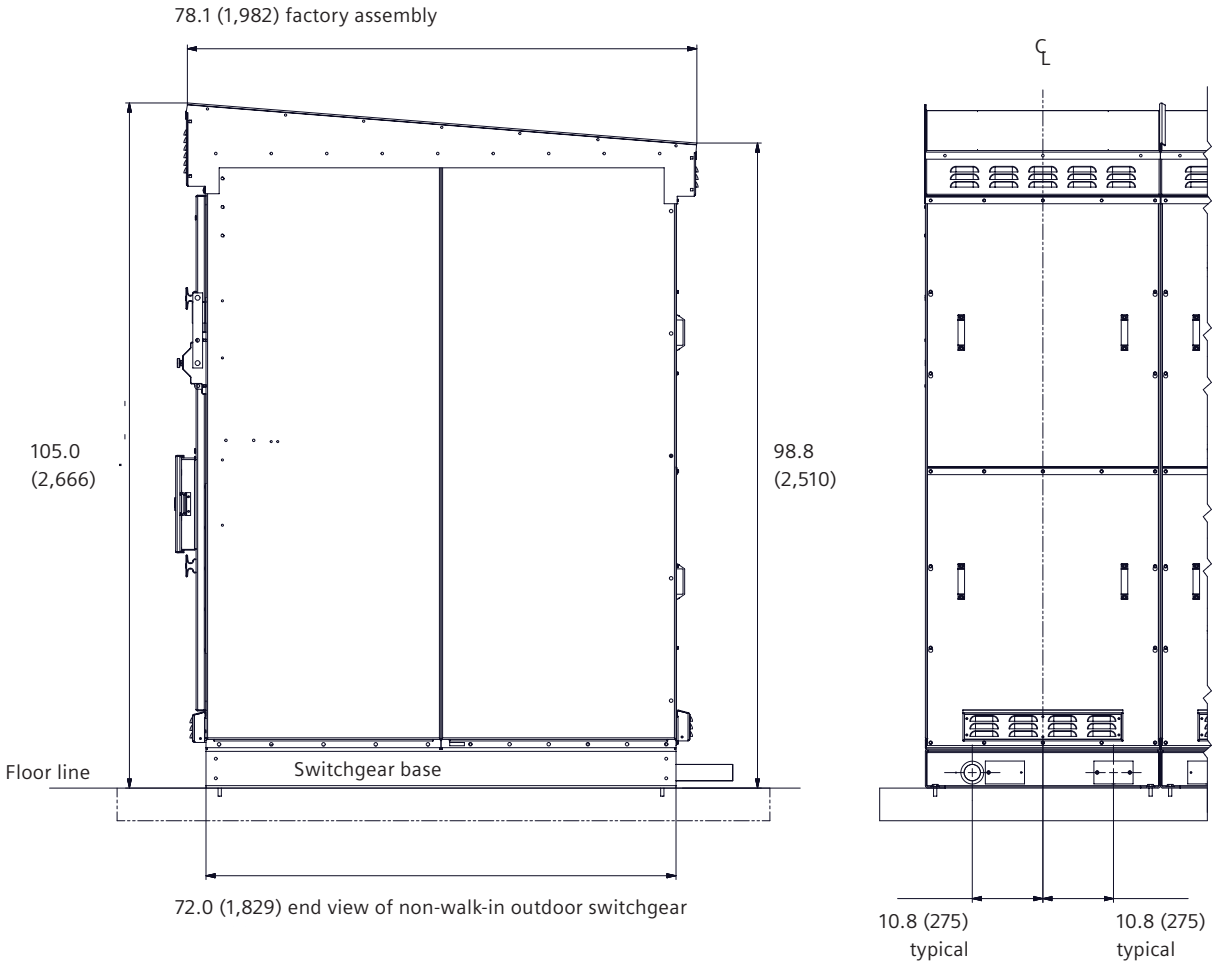

Anchoring, leveling, and assembling indoor switchgear

Indoor switchgear shipping groups are held in true alignment by bolts holding the vertical sections to each other. Figure 13 above shows the location of the inter-unit fasteners used to attach sections together.

The entire shipping group is to be anchored and leveled as a single element without loosening any hardware until entire shipping group is leveled and anchored.

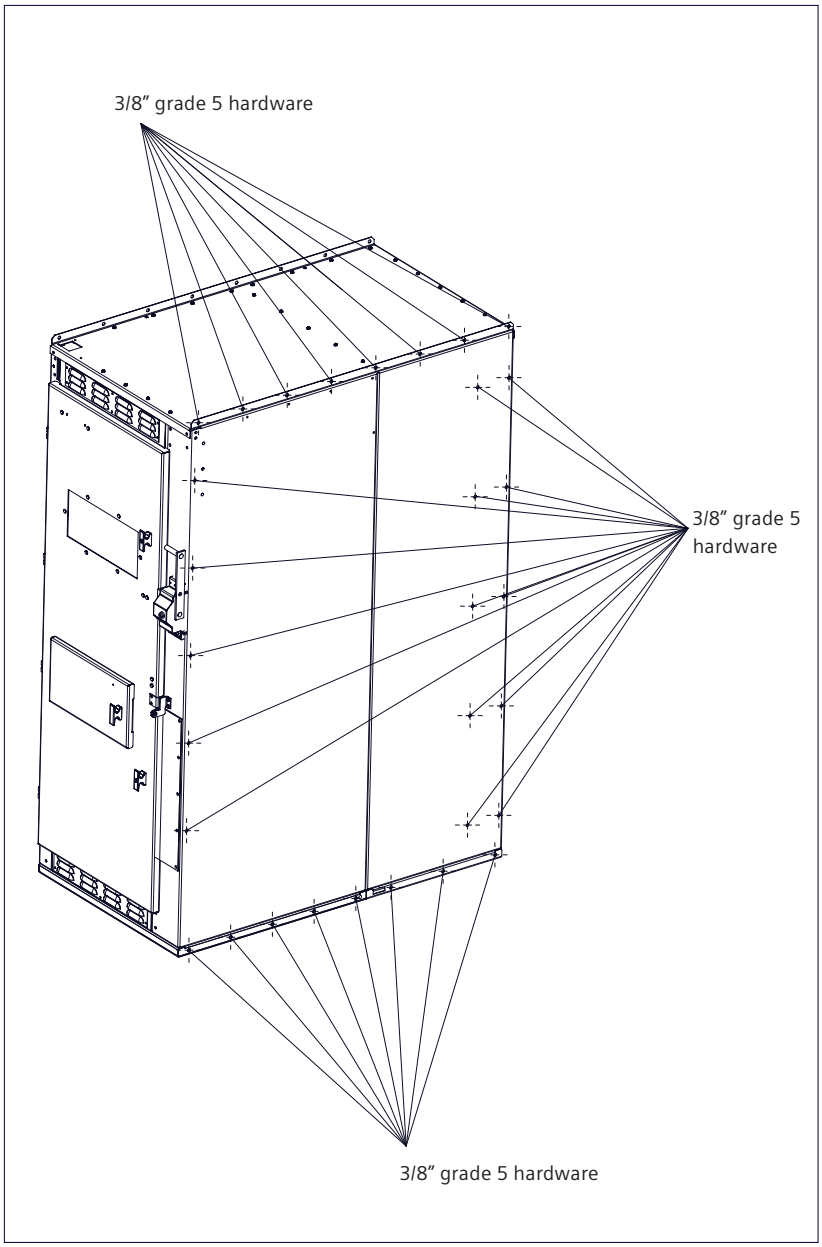

Figure 13: Inter-unit bolting locations

1. The switchgear equipment was accurately aligned at the factory. This alignment ensures proper operation and fit of mating parts. Supporting surfaces for the switchgear at each anchoring bolt location must be level and in the same plane within 0.06” (1.6 mm). There must not be any projection above this plane within the area covered by the switchgear sections.

   If the floor or grouted sill channels do not meet this requirement, it will be necessary to shim in the following manner. The four anchor bolt locations (refer to Figure 10: Anchoring indoor type SIEBREAK switchgear on page 19) in each section must freely rest in firm contact with the mounting support surfaces. There must not be any projection or obstruction in other areas that may distort the section.

   Do not force sections in firm contact by drawing down anchoring bolts because such drastic means may distort the sections. Add 4” (102 mm) square shims adjacent to anchor bolts until firm contact is achieved. Check each anchor bolt location.

2. Tighten anchor bolts or weld the switchgear to sills.

3. If the lineup consists of multiple groups, move the next group into position with the front of units in line and tight against the adjacent group. Do not bolt groups together at this time. Check that the sections are in firm contact with the foundation at each corner and anchor point and that bolt holes are in alignment. Add 4”(102 mm) square shims as necessary. Tighten the anchor bolts and then, bolt groups together.

Anchoring, leveling, and assembling outdoor switchgear

Outdoor switchgear (as shipped) is true and in correct position relative to its support base. The formed floor base sections are a permanent part of the switchgear, and are not to be loosened or moved from position.

Verify the anchor bolt locations in the concrete and all points shown in the general arrangement plan view. Sweep the foundation to make certain it is free of pebbles and other debris. Check the general arrangement drawing for positioning of the switchgear and sequence of installation if arrangement consists of more than one shipping group.

1. Remove nuts from all anchor bolts, remove caps from all secondary conduit stubs, and remove covers from secondary openings in section floor plates.

   The arrangement may consist of a single complete shipping group, or may be split into a number of shipping groups for a long lineup. Move the first group into position.

2. The switchgear equipment was accurately aligned at the factory. This care ensures proper operation and fit of mating parts. Supporting surfaces for the switchgear's 6" (152 mm) base must be level and in the same plane within 0.06" (1.6 mm). If concrete, grouted channels, pier supports, etc., do not meet this requirement, or if there is any projection higher than the support points in line with the base, shims must be installed in the following manner to provide an equivalent true surface for switchgear support.

   Outdoor switchgear groups which have been assembled on a 6" (152 mm) base must be supported along this base. Support must be provided at each end, at the side of every second section, and at shipping splits.

   If shims are required, use 4" (102 mm) square strips placed between the bottom of the base and the foundation, in the anchor bolt area where they will be clamped firmly in place. Do not force sections in firm contact by drawing down anchoring bolts as such drastic means will distort section.

3. Anchor and level this group, shimming as needed to obtain proper support of the equipment. Anchoring (and shimming) locations are shown in Figure 12: Anchoring outdoor type SIEBREAK switchgear on pages 22-23.

4. Add clamp washers and nuts to anchor bolts and tighten securely. For equipment required to withstand seismic disturbances, clamp washers are not used. Instead, install anchoring hardware through the holes in the base channel as shown in refer to Figure 12: Anchoring outdoor type SIEBREAK switchgear on pages 22-23.

5. Temporarily remove the horizontal vent cover, the filter, the front vent cover and the roof panel of the second shipping group. These panels will be replaced when the second shipping group has been connected.

6. Move the next switchgear structures shipping group into place. The front edge of the cubicle base should be in line with those of the previously installed group. Make certain that the end of the group being installed is tightly against the previously installed group.

   Check that the cubicles are in firm contact with the supports and anchor points and that bolt holes for interconnections (refer to Figure 13: Inter-unit bolting locations) are in alignment on page 24. Repeat steps 3 to 5 and install all interconnection hardware.

7. Install interconnections hardware (refer to Figure 13: Inter-unit bolting locations on page 24.) Access to the hardware for the front roof-panel supports is through the opening available with the removal of the vented front cover in step 5.

8. After all interconnecting hardware is installed; replace the parts removed in step 5.

9. Join the roof panels and install roof cap (removed in step 5). Verify that the sealant strip is in place prior to joining the roof panels.

10. Caulk all joints with the metal filler provided.

11. If additional shipping groups are required to install the complete lineup of switchgear structures, repeat the steps until all groups have been installed.

SIEBREAK AND SIEBREAK-VCB

Electrical connections

DANGER

Hazardous voltages and high-speed moving parts.

Will cause death, serious injury, or property damage.

Do not contact energized conductors.

Always de-energize and ground high-voltage conductors before working on or near them.

DANGER

Hazardous voltages and high-speed moving parts.

Will cause death, serious injury, or property damage.

Do not contact energized conductors.

Always de-energize and ground high-voltage conductors before working on or near them.

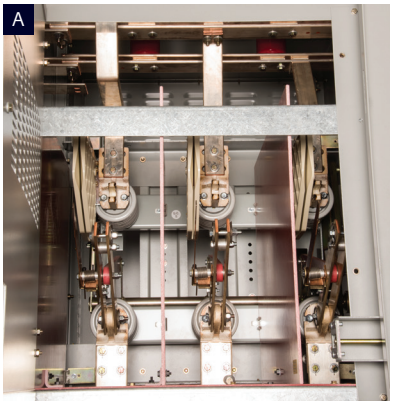

Figure 14: Access to main bus

Bus bar

Bus bar is furnished for connection among many of the high-voltage items within the switchgear, such as: main bus, load-interrupter switches, and cable-termination pads. For certain connections inside the sections (for example, voltage transformers, control power transformers, or surge arresters) cables are provided.

Standard bus bar material is copper with silver-plated joints for electrical connections. Copper bus, with tin-plated joint surfaces, is also available as an option. Bus bars are insulated with an epoxy insulation applied by a fluidized bed method.

Bus bar joints may be insulated with optional molded-insulation boots or tape.

Additional insulation is provided by clearance through air and bus supports. In some locations, standoff insulators are provided as standard. Bus is insulated as part of a coordinated insulation system. Air or creep distance plus bus insulation combines to provide the needed insulation level.

Note: Bus insulation is not designed to prevent shock.

Bus joints – main bus and ground bus

When a switchgear lineup is split for shipping purposes, the horizontal bus (main bus) and ground bus connections between shipping groups must be made when installing the equipment. These bolted connections are relatively simple to make. Refer to Figure 15: Main bus joint connection configurations for the possible main bus joint connection configurations; Figure 14: Access to main bus on page 26 which illustrates how to access the main bus area; Figure 16 shows a typical bus joint; and Figure 17 shows the ground bus connection details.

The bus bars and connection hardware for joining the bus together are normally shipped mounted on a bracket in one of the sections involved in the connection. When this is not possible, these items will be shipped in a separate package.

Full access to the main bus area is achieved by opening both the main door of the switchgear enclosure and the switch access panel on the front of the section. The switch access panel is fastened with 3/8-16 hardware. The main bus access is above the load-interrupter switch since the main bus is located at the top of the switchgear. Tie and ground bus is located at the bottom of the switchgear and is readily accessible as it is visible below the primary fuses (if supplied). Tie and ground bus can be accessed in sections containing circuit breakers by removing the access panel as just below the circuit breaker operator as shown in 14b.

1. Optional molded-plastic insulation boots for bus bar joints are normally shipped factory installed at the shipping splits. Note their location and orientation so they may be properly reinstalled after the joint is bolted together. Carefully remove and save the nylon hardware and the boot.

2. All surfaces must be free of dust, dirt, or other foreign material. Do not use any abrasive cleaner on plated contact surfaces. Cleaning is normally not necessary and should not be done unless parts are badly tarnished. If cleaning is necessary, use a mild, non-abrasive cleaner and thoroughly rinse the parts to remove any residue and keep the cleaning agent off insulation.

3. Before assembling any bus bar joint, check that the bar is seated properly in the bus supports (when required).

4. Observe the relationship of the bus bar to the section risers (for example, whether bus bar is in front of or behind the riser). Maintain this relationship when connecting bus bars. Spacers are required in some bus joint connections.

5. Assemble all joints with the parts dry. Do not use any grease or no-oxide product.

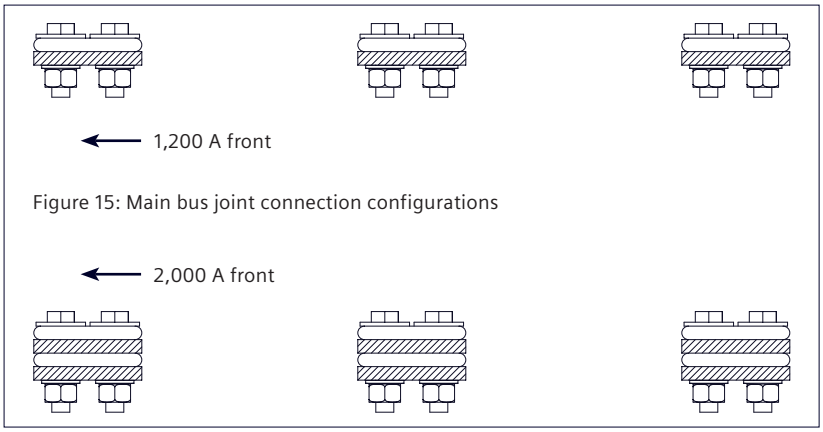

Figure 15: Main bus joint connection configurations

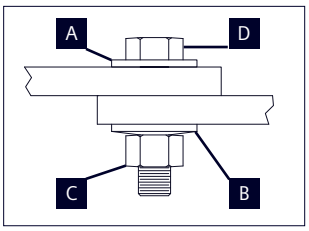

Item	Description
A	Flat washer
B	Spring washer
C	Nut
D	Cap screw

Figure 16: Main bus joint connection configurations

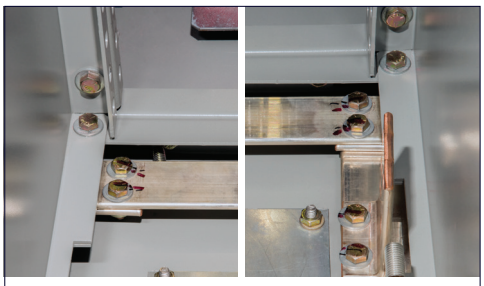

Right unit Left unit

Figure 17: Ground bus connection at shipping split

Note: All main bus hardware furnished is plated high-strength steel. Cap screws are ½-13 SAE grade 5. Do not substitute with smaller or lower-grade hardware than supplied.

6. Use proper hardware, as shown in Figure 16. A heavy flat washer is used under the cap-screw head, and a heavy spring washer is used under the nut. These washers ensure an evenly distributed force around each bolt, producing a low-resistance joint. Proper torque value produces a joint of adequate pressure without cold flow.

7. Assemble all joints as shown in Figure 15: Main bus joint connection configurations. Install all hardware the same way that factory bus connections were installed. Hardware must be aligned properly or molded insulation boots (if provided) may not fit over the joints.

8. Torque the ½-13 SAE Grade 5 cap screws to 50 to 75 lbs-ft (68 to 102 Nm). If special hardware is required by an order, other torque values will be supplied with field assembly drawings.

9. Install optional bus joint insulation boots or tape joints where required per the instructions in the following sections.

10. Connect ground bus (refer to Figure 17: Ground bus connection at shipping split on page 27). Insert splice bar through side wall between shipping groups to connect the ground bars in adjacent cubicles.

Torque the 3/8-16 SAE Grade 5 cap screw used in the ground bus to 25-40 lb-ft (34-54 Nm).

Bus insulation

Bus is insulated in SIEBREAK switchgear as required as part of a coordinated insulation system. Air or creep distance plus bus insulation combines to provide the needed insulation level. Bus insulation is not designed to prevent shock.

Epoxy insulation applied in a fluidized bed process is normally furnished on the bus bars. Bus joints may be insulated with optional boots. Taping may also used for bus-joint insulation.

Bus joint insulation boots (optional)SIEBREAK bus bar joints may be insulated with optional molded-insulation boots installed at the factory (refer to Figure 18 to see typical installation of insulating boots). If boots are specified, they are provided for field completed shipping split joints and are shipped in the location where they will finally be installed.

Before removal of the boot to complete the joint, observe the location and orientation of the boot and hardware. This should make re-installation easier.

Nylon nuts and bolts and flat washers are used to hold the boot closed after it is installed. Carefully remove the insulation boot and save all hardware.

After the bus bar joint has been properly assembled, reinstall the insulation boot. Secure the boot closed with the nylon nuts and bolts.

Bus joint insulation taping

Insulation boots are provided for repetitive bus joint conditions when optional insulation boots are required. If the installed clearance (phase-to-phase or phase-to-ground) is less than 6” (152 mm) for 8.25 kV and 15 kV switchgear or 3.5” (89 mm) for 5 kV switchgear, the joint must be insulated to maintain the dielectric-withstand capability of the installed equipment and to reduce the likelihood of arcing faults. If clearance is less than these limits, and boots are not provided, the bus joints must be carefully taped to the required insulation level. Refer to Figures 19 to 21.

1. Inspect bolted joints to ensure they are correctly assembled, with bolt heads in the proper direction and the proper hardware torque value. All surfaces must be free of dust, dirt, or other foreign material.

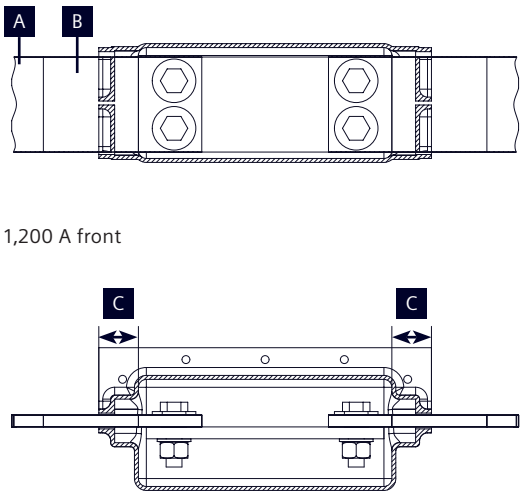

Item	Description
A	Bare bar
B	Insulation
C	Overlap 1.25"

Figure 18: Typical installation of insulating boots

Figure 19: Installation of mastic pads

Figure 20: Insulation with half-lapped tape

Figure 21: Final insulation

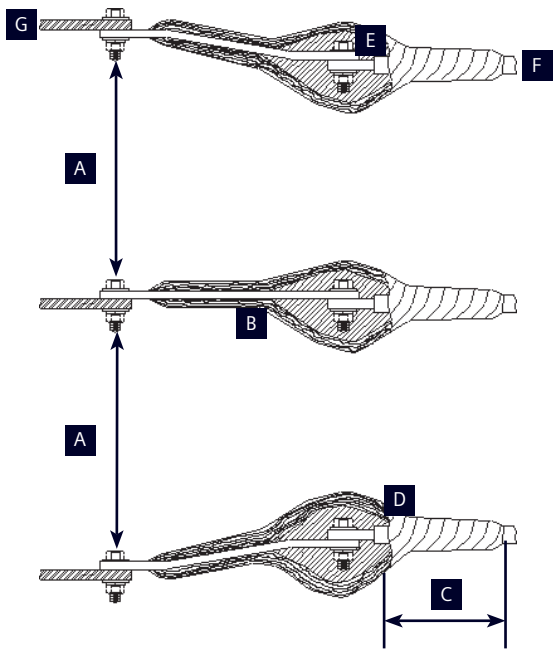

Item	Description	
Voltage	5 kV	8.25 kV and 15 kV
A	3.5" (89 mm) minimum	6.0" (152 mm) minimum
B	1" or 2" tape (half-lapped)/8.25 kV and 15 kV three layers/5 kV two layers	
C	1.5" (38 mm) minimum overlap for 5 kV/ 6.0" (152 mm) minimum overlap for 8.25 kV and 15 kV	
D	Bus insulation	
E	Mastic pad	
F	Insulated switchgear bus	
G	Uninsulated transformer connection	

Figure 22: Taped joint-insulation switchgear bus to a power transformer throat

2. Apply a mastic pad over nuts and bolt heads of the joint (normally two pads are sufficient, but one may cover smaller patterns). Use either a small (15-171-988-001: 3.25" x 4.50") or a large (15-171- 988-002: 4.50" x 6.50") pad most suitable for the joint involved. Remove backing and place over the joint with the adhesive side up and mold in place covering all sharp projections. Tape the pads into place with a cross pattern. When doing this, push the pads in between the bolts/nuts to remove air pockets.

3. Apply half-lapped layers of 4" (102 mm) wide tape (15-171-987-002) or 1" (25 mm) wide tape (15-171- 987-001) over the joint. Each layer should overlap the bus bar insulation by at least 1.5" (38 mm). Stretching of tape 10 to 15 percent will help ensure a tight fit as you go around. Continue to work out any voids or air pockets (especially around the mastic pads and hardware).

4. Finish the joint with a layer of 1" (25 mm) tape (15-171-987-001), continuing to slightly stretch the tape for a tight fit. The finished joint should have a neat and professional appearance, and should feel solid when pushed or pressed in; showing that there are no voids or air pockets.

For 5 kV class equipment, use two half-lapped layers of tape over mastic pads. For 8.25 kV and 15 kV class equipment, use three half-lapped layers of tape over the mastic pads.

Avoid excessive pressure on the completed bus-joint insulation. If bus joints are on standoff insulators, apply tape per the above procedures except the half-lapped tape should overlap the insulator by at least 2" (51 mm).

Transformer bus joints insulation

The typical transformer to switchgear bus joint shown in Figure 22: Taped joint-insulation switchgear bus to a power transformer throat is different from other bus joints in the switchgear main bus. In the transformer bus joints, there is a transition from the insulated switchgear system to the transformer, where the spacing between conductors is usually large enough so that the conductors need not be insulated. The use of flexible connectors in this area ensures correct alignment of the switchgear conductors to the transformer conductors. If the installed clearance (phase-to-phase or phase-to-ground) is less than 6" (152 mm) for 8.25 kV and 15 kV switchgear (3.5" (89 mm) for 5 kV switchgear), the joint must be insulated. Refer to Figure 22: Taped joint-insulation switchgear bus to a power transformer throat, and insulate bus joint connections as outlined in Bus joint-insulation taping on page 28.

DANGER

Hazardous voltages and high-speed moving parts.

Will cause death, serious injury, or property damage.

Do not contact energized conductors.

Always de-energize and ground high-voltage conductors before working on or near them.

Note: Dimensions are for reference only and are in inches (mm). Size and location of stress cone as recommended by cable manufacturer.

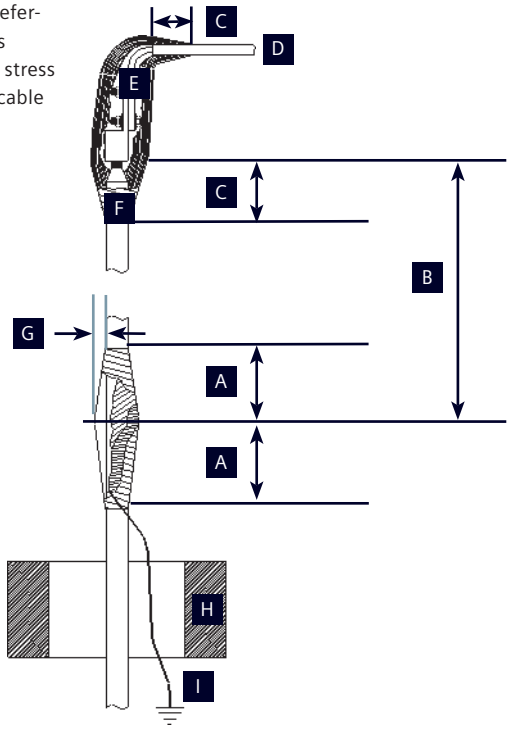

Item	Description	
Voltage	5 kV	8.25 kV and 15 kV
A	2" (51 mm)	4" (102 mm)
B	7" (178 mm)	18" (457 mm)
C	1.5" (38 mm) minimum overlap	
D	Bus insulation	
E	Mastic pad	
F	1” or 2” tape (half-lapped) / 8.25 kV and 15 kV three layers / 5 kV two layers	
G	Build up equal to insulation thickness	
H	Ground sensing current transformer	
I	Ground lead to shielding at stress cone must pass through current transformer as shown for proper relay operation	

Figure 23: Primary cable termination and insulation

Cable connections to SIEBREAK switchgear can be left bare or insulated depending upon the clearances provided. If the installed clearance (phase-to-phase or phase-to-ground) is less than 6” (152 mm) for 8.25 kV and 15 kV switchgear or 3.5” (89 mm) for 5 kV switchgear, the joint must be insulated to maintain the dielectric-withstand capability of the installed equipment and to reduce the likelihood of arcing faults. Optional cable-lug boots similar to the bus-joint boots are available. Recommendations of the cable supplier should be followed for the installation. Typical termination configurations are shown in Figure 22: Taped joint-insulation switchgear bus to a power transformer throat on page 29, Figure 23: Primary cable termination and insulation, and Figure 24: Typical cable terminal mounting and insulation (for insulated bus and connections) on page 31.

Because of considerable variations in installation requirements and available cables, Siemens furnishes a double-bolt, double-clamp, terminal lug as an option. Each SIEBREAK section can accept one 750 kcmil or two 500 kcmil cables per phase as standard. Other cables and combinations are optional.

For cable terminations, bus drilling is configured to accommodate cable terminals with hole patterns in accordance with NEMA CC-1 standards. All insulating and terminating materials other than terminal lugs and cable supports are to be furnished by the purchaser.

The locations where primary cable entrances are located (either on the top plate or floor plate) must be prepared with conduit hubs or similar entrance fittings. The bottom cable entrance may have galvanized steel removable covers for ease in identifying them. Figure 25 on page 32 shows the routing of cables for SIEBREAK sections.

In the case of sealing conduits, the materials used to seal around the perimeter of the equipment are not appropriate. The use of flame-resistant electric cable or duct-sealing system is recommended. Fittings intended for use in hazardous (or similarly classified) environments should be suitable.

The incoming-line sections for front-access only sections can accommodate top- or bottom-entry cable or bus connections and are 24" (610 mm) wide as standard.

The following general recommendations are offered for proper cable termination in the SIEBREAK switchgear:

1. Position the cables for maximum clearance between phases, ground, and other cable runs.
2. Secure cables to cable supports provided to control movement during fault conditions.
3. Avoid any possible contact between low-voltage wires and medium-voltage cables.
4. Prepare cable terminations in accordance with the cable manufacturer's instructions.
5. If contact between the cable and adjacent bus cannot be avoided, tape the bus to approximately 5/32 " (4 mm) thickness in the immediate vicinity of the cable contact point so that the surface creep distance from the cable to the bare bus bar is at least 3.5" (89 mm) for up to 5 kV and 6" (152 mm) for 15 kV.

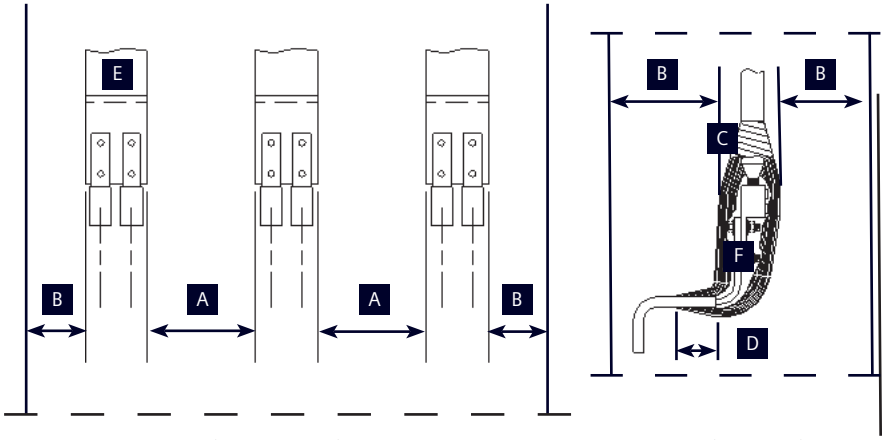

Rear view (bottom cable) Side view (top cable)

Item	Description	
Voltage	5 kV	8.25 kV and 15 kV
A	Phase-to-phase 1.75" (44 mm) minimum	Phase-to-phase 3.25" (83 mm) minimum
B	Phase-to-ground 1.75" (44 mm) minimum	Phase-to-ground 3.25" (83 mm) minimum
C	1" or 2" tape (half-lapped) / 8.25 kV and 15 kV three layers / 5 kV two layers	
D	1.5" (38 mm) minimum overlap	
E	Insulated phase ends	
F	Mastic pad	

Figure 24: Typical cable terminal mounting and insulation (for insulated bus and connections)

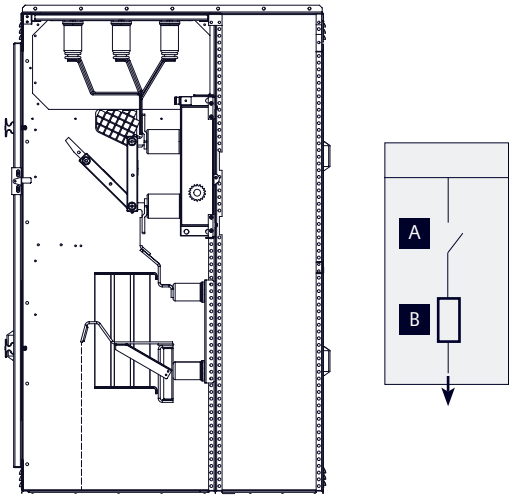

Front-access unit (fuses only) with main bus

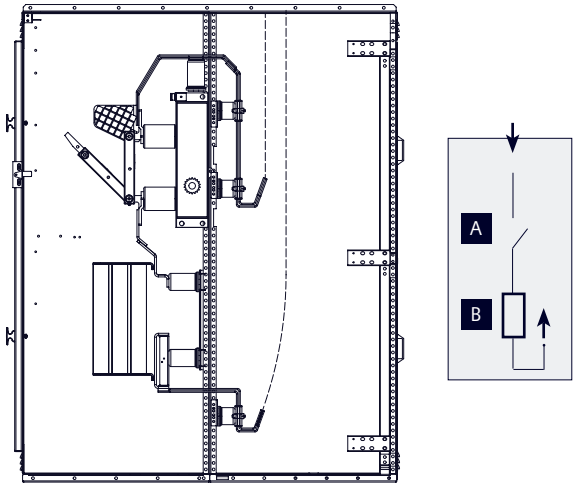

Single switch - rear access

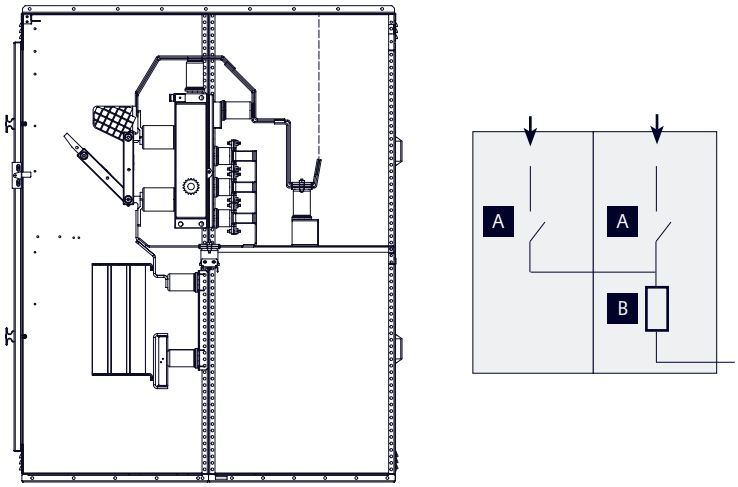

Duplex switch - rear access

Figure 25: Routing of cables for SIEBREAK switchgear

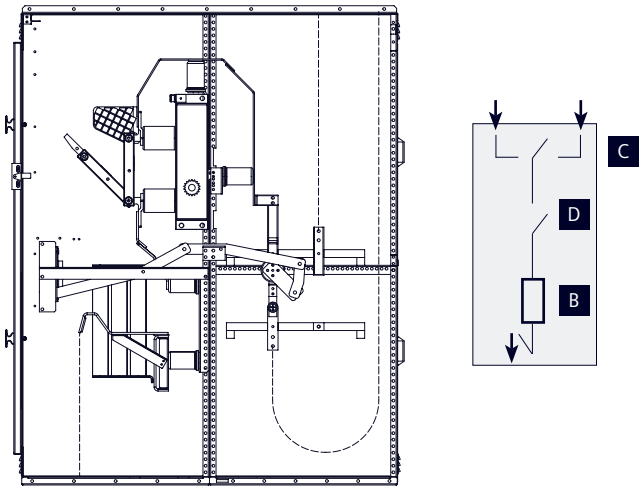

Selector switch (fuses only) - top-entry cables

Item	Description
A	600 A or 1,200 A interrupter switch
B	Fuses or circuit breaker
C	600 A non-load selector switch
D	600 A load-interrupting switch

Secondary control wiring

Secondary control wiring is installed and tested at the factory. Inter-group wiring at shipping splits can be readily connected by referring to wire markings. These wires are not terminated and are of sufficient length to be routed to their termination point after cubicles are bolted together. Terminals for these leads are furnished by the purchaser to suit the available crimping tools. Terminal block hardware is furnished with the switchgear. All wiring diagrams needed for installation are furnished in advance.

Wires can be easily traced on wiring diagrams furnished for the switchgear. Each device is illustrated and identified with a letter. Each terminal on each device is identified by an alphanumeric code. The wire list adjacent to each device on the diagram indicates the device and terminal number to which each wire is connected at the next connection point.

All secondary control wiring installed by the factory is neatly bundled and attached to the section. Make all field connections in a similar manner. Check that the SIEBREAK components and the hinged front panel clear any additional wiring installed. Figure 26: Secondary control cable connections shows a typical secondary control cable installation.

All purchaser's wiring is to be routed behind the cable retainer, which is removable for installation purposes. Use plastic or nylon ties to secure all field installed wires to the cubicle structure.

Grounding

The frame of each switchgear section must be electrically grounded. This connection must be made before making power connections. A common ground bus is incorporated in all sections for grounding the equipment during installation. The ground bus extending through the switchgear is accessible in the rear area of each section as seen in Figure 17: Ground bus connection at shipping split on page 27 or in the front area of each section for front-access only switchgear. The control and instrumentation circuits are grounded to the enclosure. This connection can be temporarily removed for test purposes, but it must be reconnected before the switchgear is placed into operation.

Provisions for connecting the ground bus to the substation ground must be made in such a manner that a reliable ground connection is obtained. Consult latest National Electrical Code® (NFPA 70®) for ground connection requirements.

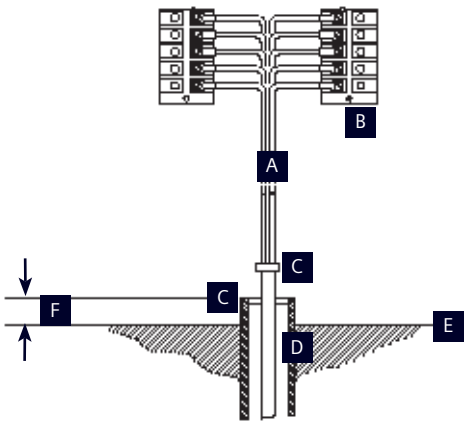

Item	Description
A	Control cable
B	Terminal block
C	Seal
D	Conduit
E	Floor line
F	1.0" (25 mm) maximum

Figure 26: Secondary control cable connections

SIEBREAK AND SIEBREAK-VCB

Instrument transformers

DANGER

Hazardous voltages and high-speed moving parts.

Will cause death, serious injury, or property damage.

Do not contact energized conductors.

Always de-energize and ground high-voltage conductors before working on or near them.

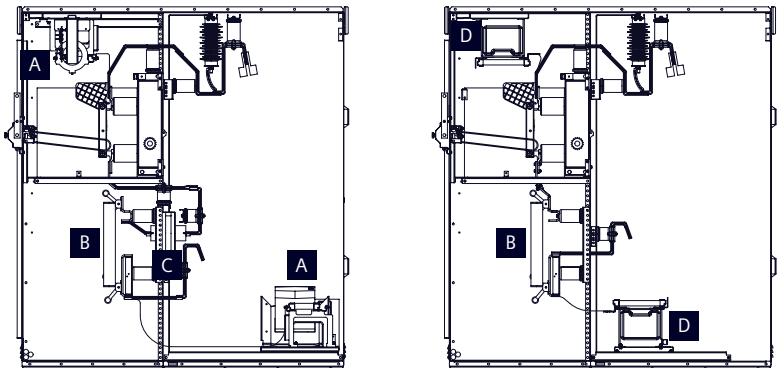

Item	Description
A	Control power transformer
B	Fuses or circuit breaker
C	Current transformer
D	Voltage transformer
E	Zero-sequence ground sensor current transformer (not shown)

Figure 27: Typical VT, CPT and CT configurations

Control power and voltage transformers general information

When required, voltage transformers (VTs), control power transformers (CPTs), or current transformers (CTs) can be supplied in SIEBREAK switchgear.

- One, two or three VTs with primary fuses may be located in a section as shown in Figure 27: Typical VT, CPT and CT configurations.
- One CPT, up to 15 kVA single phase, with the associated primary fuses, may be mounted as shown in Figure 27: Typical VT, CPT and CT configurations.
- Up to one (standard accuracy) CT may be mounted around each primary insulator tube on either the line side or the load side of the primary fuses or circuit breaker as shown in Figure 27: Typical VT, CPT and CT configurations. This allows up to two CTs per phase to be furnished in a SIEBREAK switchgear section.
- A zero-sequence toroidal CT can be furnished for ground-sensing circuits. The CT is mounted in the primary cable area at a convenient height for receiving purchaser's cables. Zero-sequence CTs may require that conduits for multiple bottom entrance cables be recessed.

Before the equipment is energized, it must be thoroughly inspected and tested. Correct any deviations before energization.

SIEBREAK AND SIEBREAK-VCB

Inspection and testing

Pre-energization inspection

Check the following points:

1. Remove all blocks or other temporary holding means used for shipment from all component devices in the switchgear interior.
2. Re-tighten all accessible connections in accordance with the torque values provided in the maintenance section of this instruction manual.
3. Check that high-voltage connections are properly insulated.
4. Check the enclosure to see that it has not been damaged and that electrical spacing has not been reduced.
5. Compare all circuits for agreement with the wiring diagrams which accompany the switchgear.
6. Make certain that internal wiring is clear of bus, and all power cabling is physically secured to withstand the effects of the largest fault current which the supply system is capable of delivering.
7. Verify that all ground connections have been made properly. If sections of the switchgear were shipped separately, they must be connected in a manner to assure a continuous ground path.
8. Check all devices for damage.
9. Ensure that fuse rating is in agreement with the rating specified in the switchgear data label and that all fuses are installed correctly (if supplied).

DANGER

Hazardous voltages and high-speed moving parts.

Will cause death, serious injury, or property damage.

Disconnect, lockout, and ground incoming power and control voltage sources before beginning work on this or any other electrical equipment.

All pre-energization checks outlined in this instruction manual must be performed before the equipment is energized. This equipment should be energized by qualified personnel only.

10. Manually exercise all operating mechanisms, interlocks, and other devices to make certain that they are properly aligned and operate freely.
11. Operate the load-interrupter switch several times checking for main blade and arcing blade alignment with the stationary contacts and arc chute.

Note: Do not attempt to polish or clean the blades with powdered emery, scouring pads, or other abrasives. Such practice inevitably results in poor contact and overheating.

12. With all loads disconnected, exercise any electrically-operated devices with test power to determine that they operate properly. Refer to the wiring diagrams for the required control voltage, frequency, and test power terminal designations required to test the switchgear.
13. Test the ground-overcurrent protection system (if furnished) functionality.
14. Set all devices and protective relays (if provided) with adjustable current and/or voltage settings to proper values.

15. Install any necessary CT circuit wiring, and remove CT short-circuiting jumpers installed for shipment. (Do not remove CT short-circuiting jumpers if no load circuit is connected to the CT). If short-circuiting type terminal blocks are provided, verify that short-circuiting screws are removed or shorting links are in the OPEN position. Check each current transformer secondary circuit for continuity through its protective devices to ground. Do not operate switchgear with a current transformer's secondary circuit open.
16. Verify that all vent areas are clean and free of shipping or construction material.
17. To prevent possible damage to equipment or injury to personnel, check that all parts and barriers that may have been removed during wiring and installation have been properly re-installed.
18. Before closing the enclosure, remove all metal clips, scrap wire, and other debris from the switchgear interior. Remove any accumulation of dust or dirt, clean out the switchgear by using a brush, vacuum cleaner, or clean lint-free rags. Do not used compressed air as it will only redistribute contaminants on other surfaces.
19. Install covers, close doors, and make certain that no wires are pinched and that all enclosure parts are properly aligned and all doors are closed and securely latched properly. Doors with 3/8-16 hardware must be torque to 25 to 40 lbf-ft (34 to 54 Nm).

Note: Slight variations in the levelness of the installed equipment can make variations between interlock components mounted on the hinged panel and components mounted on the fixed structure. Shimming of the structure or loosening and shifting of the interlock components may be required after final installation.

Circuit breaker specific checks

This section provides a description of the inspections, checks and tests to be performed on the circuit breaker only.

The inspections and checks in this section are to be performed with the circuit breaker disconnected and isolated from primary (high-voltage) power sources.

Inspections, checks and tests without control power

Vacuum circuit breakers are normally shipped with their primary contacts open and their springs discharged. However, it is critical to first verify the discharged condition of the spring-loaded mechanisms after de-energizing control power.

De-energizing control power

To de-energize control power to the circuit breaker, open the control power disconnect device in the relay and control compartment.

Spring-discharge check

Perform the spring-discharge check after de-energizing control power. This check assures both the tripping and closing springs are fully discharged.

1. Press Trip pushbutton.
2. Press Close pushbutton.
3. Press Trip pushbutton again.
4. Verify spring-condition indicator shows DISCHARGED.
5. Verify main contact status indicator shows OPEN.

Manual-spring charging check

1. Insert the manual-spring charging crank into the manual-charge handle socket. Turn the crank clockwise until the spring-condition indicator shows the closing spring is CHARGED.
2. Repeat the spring-discharge check.
3. Verify the springs are DISCHARGED and the circuit-breaker primary contacts are OPEN by indicator positions.

Automatic spring-charging check

The automatic spring-charging features of the circuit breaker must be checked. Control power is required for automatic spring charging to take place.

Note: A temporary source of control power and test leads may be required if the control power source has not been connected to the circuit breaker. Refer to the specific wiring information and rating label for your circuit breaker to determine the voltage required and where the control-voltage signal should be applied. When control power is connected to the circuit breaker, the closing spring should automatically charge.

1. Close the control power disconnect device to energize the circuit breaker control circuit. If not previously charged, the closing spring should charge automatically.
2. Use the manual close and open controls on the circuit breaker operating mechanism to first close and then open the circuit breaker contacts. Verify contact positions visually by observing the OPEN/CLOSED indicator on the circuit breaker.
3. In step 2, when the close pushbutton was pressed, the circuit breaker should have closed, and the closing spring should have recharged automatically.
4. De-energize control power by opening the control power disconnect.
5. Perform the spring-discharge check.
   A. Press Trip pushbutton.
   B. Press Close pushbutton.
   C. Press Trip pushbutton again.
   D. Verify spring-condition indicator shows DISCHARGED.
   E. Verify main contact status indicator shows OPEN.

DANGER

Hazardous voltages and high-speed moving parts.

Will cause death, serious injury, or property damage.

Read instruction manuals, observe safety instructions and use qualified personnel.

Final mechanical inspections without control power

1. Make a final mechanical inspection of the circuit breaker. Verify the contacts are in the OPEN position, and the closing spring is discharged.
2. Verify mechanical condition of springs.
3. Check for loose hardware.

DANGER

Hazardous voltages.

Will cause death, serious injury, or property damage.

Disconnect, lockout, and ground incoming power and control voltage sources before beginning work on this or any other electrical equipment.

All pre-energization checks outlined in this instruction manual must be performed before the equipment is energized. This equipment should be energized by qualified personnel only.

DANGER

Hazardous voltages.

Will cause death, serious injury, or property damage.

Follow safe procedures. Exclude necessary personnel. Use safety barriers. Keep away from equipment during application of test voltages. Dielectric or Megger* testing should only be conducted by qualified personnel. Refer to dielectric test equipment instructions for safety instructions.

WARNING

Vacuum interrupters may emit X-ray radiation.

Will cause death or serious injury.

Excessive dielectric test voltage can cause X-radiation to be emitted from vacuum interrupters.

Refer to instruction manual for dielectric test procedures applicable to the vacuum circuit breaker.

* Megger is a registered trademark of Megger Group, Ltd.

CAUTION

Excessive test voltages.

May result in damage to equipment.

Do not perform dielectric tests at test voltages exceeding the ratings of the tested equipment.

Testing

Note: Do not use dc high-potential testers incorporating half-wave rectification. These devices produce high-peak voltages.

These high voltages will produce X-ray radiation when testing vacuum interrupters. These devices also show erroneous readings of leakage current when testing vacuum interrupters.

An insulation-resistance test should be made on the high-voltage circuit to be sure that all connections made in the field are properly insulated. An insulation-resistance test is also advisable on the control circuit.

A dielectric test, if possible, should be made on the high-voltage circuit for one minute at one of the following voltages corresponding to the rated voltage of the equipment. (VTs, CPTs, surge arresters, and surge capacitors must be disconnected during this test).

Table 2: Field test voltage

Rated maximum voltage kV rms	Power frequency withstand kV rms	Field test voltage	
		kV rms	kV dc
4.76	19	14	20
8.25	36	27	38
15.0	36	27	38

SIEBREAK AND SIEBREAK-VCB

Switch operation

General

The SIEBREAK switchgear features a manually operated, single-throw, gang-operated, load-interrupter switch for application needs with loads rated 600 A or 1,200 A. A quick-make, quick-break arcing blade combined with an arc chute provides positive, three-phase interruption of transformer magnetizing and load currents. The switch uses a quick-make, quick-break stored-energy operator.

The load-interrupter switch is completely adjusted, tested, and inspected at the factory before shipment. No additional adjustment is necessary; however, check to be sure shipment and storage have not resulted in damage.

The load-interrupter switch may be unfused or fused to provide fault-current interrupting capacity. To prevent any of the fuse discharge gases from contaminating the switch and arc-chute area, fuses are mounted below the switch.

Note: A fused switch should not be used on circuits sensitive to single phasing.

The switch differs from a circuit breaker in that it will interrupt its full-load current, but it will not interrupt overload or fault currents.

To provide a level of personnel safety, the load-interrupter switch has the following standard features:

- Optional key interlocks prevent closing the switch if a circuit breaker is supplied and the circuit breaker is in the CLOSED position.
- When the switch is in either the OPEN or CLOSED position, the springs are not charged.
- A mechanical interlock prevents closing the switch if the front door of the section is not closed and properly latched.
- A mechanical interlock prevents access to the switch and fuses or circuit breaker (whichever is provided) while the switch is in the CLOSED position.
- Operation of the switch requires two separate and distinct actions to prevent inadvertent operation of the switch.

The switch is manually operated by a spring-over-center, stored-energy operating mechanism through a chain drive and is equipped with an arc chute and quick-make blade. The quick-make closing and quick-break opening energy is supplied by 180 degree rotation of the operating handle. The opening and closing springs of the stored-energy mechanism provides for quick make (rated fault closing) and quick break (rated interruption). The resulting high-speed closing and opening assures safe operation and long life.

The switch mechanism shaft is driven by a chain and sprocket from the front operating handle. As the handle is rotated, it is directly connected to a sprocket which drives the opening spring to a CHARGE position. As the operator continues to rotate the handle, the charged spring is driven over-center by the chain and releases its energy into the rotating shaft to open. The switch blades will not move, in either a closing or opening direction, until the closing spring causes rotation in the operating shaft.

Note: Once the springs are moved over-center, the operator has no further control of the opening or closing operation. Therefore, the fault-closing and load-break operations are independent of the operating speed of the handle.

Figure 28 shows the basic construction and major components of the switch.

Figure 29: Operation of the load-interrupter switch

Switch operation

To close the switch from the OPEN position, close and latch the section door.

Pull on the release knob located in the center of the operator casting to release the operating handle as shown in Figure 29: Operation of the load-interrupter switch.

Note: Failure to pull the release knob before attempting to operate handle may cause equipment damage.

While holding the release knob, rotate the operator handle about 15 degrees or until resistive force is felt in the handle to prevent the knob and locating pin from resetting (as shown in Figure 29). At that point it is no longer necessary to hold the release knob.

Continue rotating the handle 180 degrees upward with a rapid, continuous motion, to the full CLOSED position.

Conversely, opening the switch is accomplished by the same procedure by downward rotation of the operating handle.

Figure 28: Load-interrupter switch components

Item	Description
A	Arc chute
B	Stationary arcing contact (not showing - inside item A arc chute)
C	Insulator
D	Stationary main contact
E	Quick-acting blade
F	Main switch blade
G	Hinge contact
I	Position indicators
J	Release knob

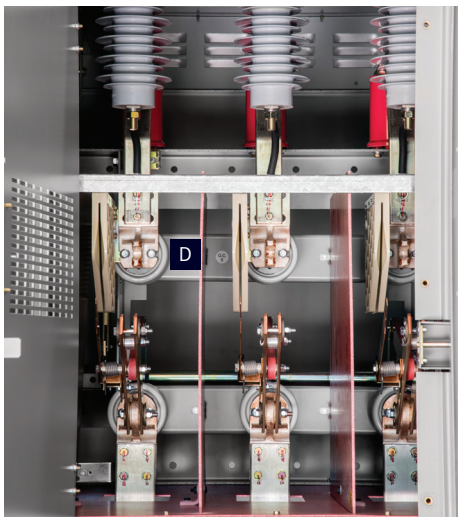

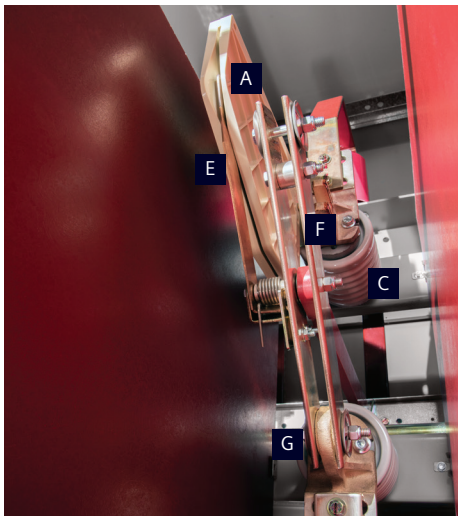

SIEBREAK AND SIEBREAK-VCB

Circuit breaker operation

Introduction

The type SBVCB vacuum circuit breakers are of fixed-mount construction designed for use in medium-voltage, metal-enclosed switchgear. The circuit breaker conforms to the requirements of ANSI and IEEE standards, including C37.04, C37.06, C37.09 and C37.010. A type SBVCB vacuum circuit breaker consists of three vacuum interrupters, a stored-energy operating mechanism, necessary electrical controls and interlock devices, and an operator housing.

This section describes the operation of each major sub-assembly as an aid in the operation, installation, maintenance and repair of the type SBVCB vacuum circuit breaker.

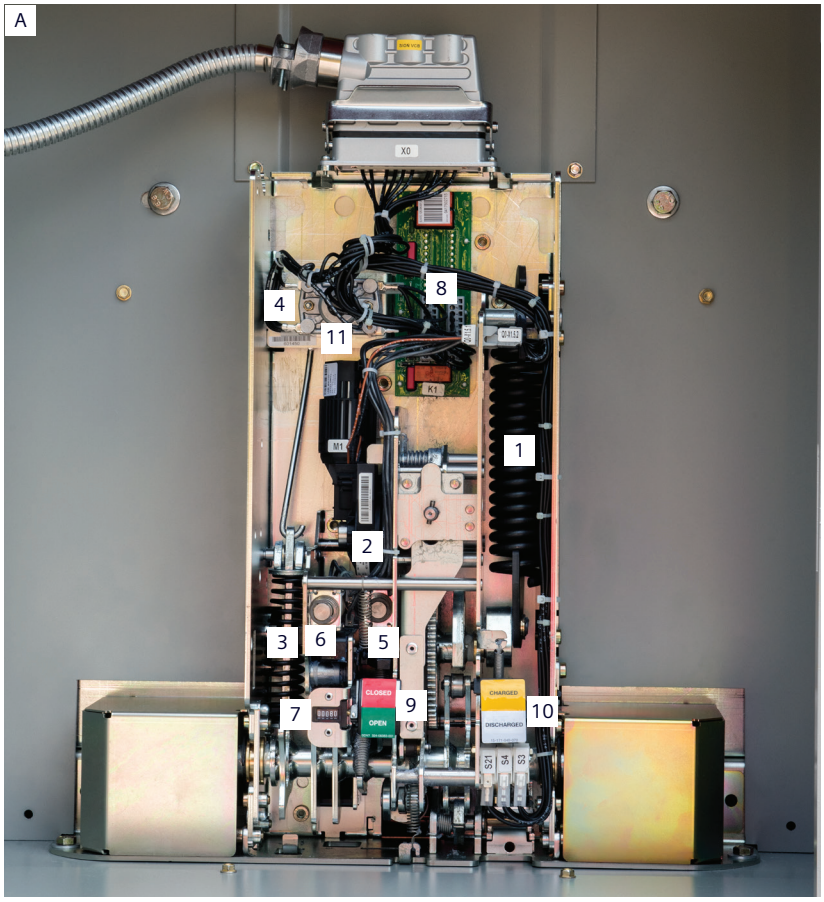

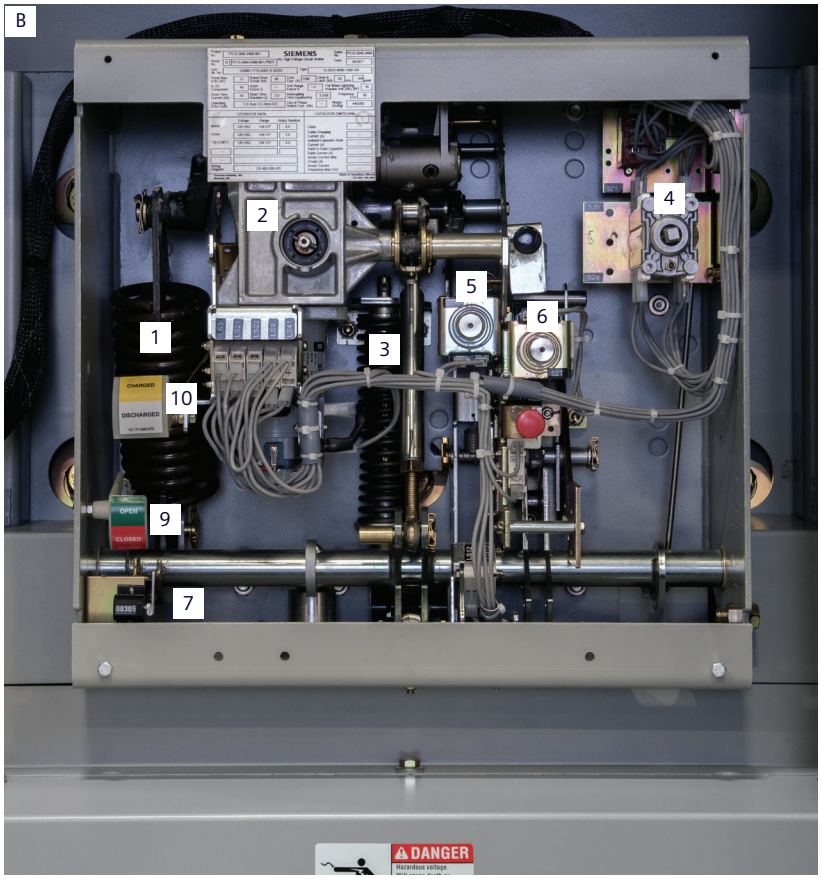

Figure 30: Front view of vacuum circuit breakers with front panel removed. Item A 25 kA circuit breaker. Item B 40 kA circuit breaker.

Item	Description
1	Closing spring
2	Gearbox
3	Opening spring
4	Auxiliary switch
5	Closing coil
6	Trip coil
7	Operations counter
8	Anti-pump relay
9	OPEN/CLOSED indicator
10	CHARGED/DISCHARGED indicator
11	Spring-charging motor

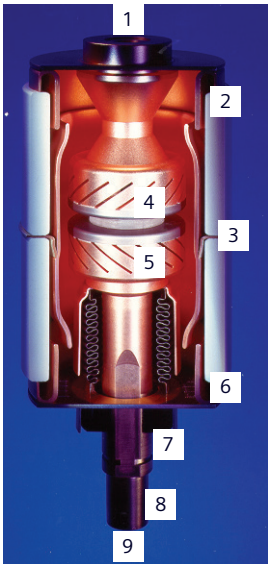

Item	Description
1	Fixed contact-current connection
2	Ceramic insulator
3	Arc shield
4	Fixed contact
5	Moving contact
6	Ceramic insulator
7	Metal bellows
8	Guide
9	Moving contact-current connection

Figure 31: Vacuum interrupter cutaway view

Vacuum interrupters

The operating principle of the vacuum interrupter is simple. Figure 31: Vacuum interrupter cutaway view is a cutaway view of a typical vacuum interrupter. The entire assembly is sealed after a vacuum is established. The vacuum-interrupter stationary contact is connected to the upper terminal of the circuit breaker. The vacuum-interrupter movable contact is connected to the lower terminal and driving mechanism of the circuit breaker. The metal bellows provides a secure seal around the movable contact, preventing loss of vacuum while permitting vertical motion of the movable contact.

When the two contacts separate, an arc is initiated that continues conduction up to the following current zero. At current zero, the arc extinguishes and any conductive metal vapor that has been created by and supported by the arc condenses on the contacts and on the surrounding arc shield.

Contact materials and configuration are optimized to achieve arc motion, resist welding and to minimize switching disturbances.

Phase barriers

Glass-polyester insulating barriers are attached to the circuit breaker frame and provide suitable electrical insulation between the vacuum-interrupter primary circuits and the housing.

Stored-energy operating mechanism

The stored-energy operating mechanism of the type SBVCB vacuum circuit breaker is an integrated arrangement of springs, solenoids and mechanical devices designed to provide a number of critical functions. The energy necessary to close and open (trip) the contacts of the vacuum interrupters is stored in powerful tripping and closing springs. The closing springs are normally charged automatically, but there are provisions for manual charging. The operating mechanism that controls charging, closing and tripping functions is fully trip-free. Trip-free requires that the tripping function prevail over the closing function as specified in ANSI/IEEE C37.04-1999, clause 6.9. The operation of the stored-energy mechanism will be discussed later in this section.

Construction

Refer to Figure 32: Operating mechanism controls and indicators on page 43.

Each of the circuit breaker poles is fixed to the rear of the operating-mechanism housing or cast-resin insulators or a molded-insulating structure.

The insulators or molds also connect to the upper and lower pole-supports that in turn supports the ends of the vacuum interrupter.

The energy-storing mechanism and all the control and actuating devices are installed in the mechanism housing. The mechanism is of the spring-stored energy type and is mechanically and electrically trip-free.

The manual close button (53.0), manual OPEN/TRIP button (54.0), OPEN/CLOSED indicator (58.0), CHARGED/DISCHARGED indicator (55.0), the operations counter (59.0), and manual-spring charging port (50.1) are located no the front of the mechanism housing.

Switching operation

When a closing command is initiated, the closing spring that was previously charged by hand or by the motor, actuates the moving contact.

The motion of the insulated coupler is converted into the vertical movement of the moving contact.

During closing, the tripping spring and the contact-pressure springs are charged and latched. The closing spring is recharged immediately after closing.

In the CLOSED state, the necessary contact pressure is maintained by the contact-pressure spring and the atmospheric pressure. The contact-pressure spring automatically compensates for contact erosion, which is very small.

When a tripping command is given, the energy stored in the tripping- and contact-pressure springs is released. The opening sequence is similar to the closing sequence. The residual force of the tripping spring arrests the moving contact in the OPEN (TRIPPED) position.

Operating mechanism

The operating mechanism is comprised of the mechanical and electrical components required to:

Charge the closing springs with sufficient potential energy to close the circuit breaker and to store opening energy in the tripping- and contact-pressure springs.

Means to initiate closing and tripping actions.

Means of transmitting force and motion to each of three poles.

Operate all of these functions automatically through electrical-charging motor, cutout switches, anti-pump relay, release (close and trip) solenoids and auxiliary switches.

Provide indication of the circuit breaker status (OPEN/CLOSED), spring condition (CHARGED/DISCHARGED) and number of operations.

The control and sequence of operation of the mechanism is described in Figure 33: Operator sequence operation diagram on page 45.

Indirect releases (tripping coils)

The shunt releases convert the electrical-tripping pulse into mechanical energy to release the trip latch and open the circuit breaker.

The undervoltage release (optional) may be electrically actuated by a make or a break contact.

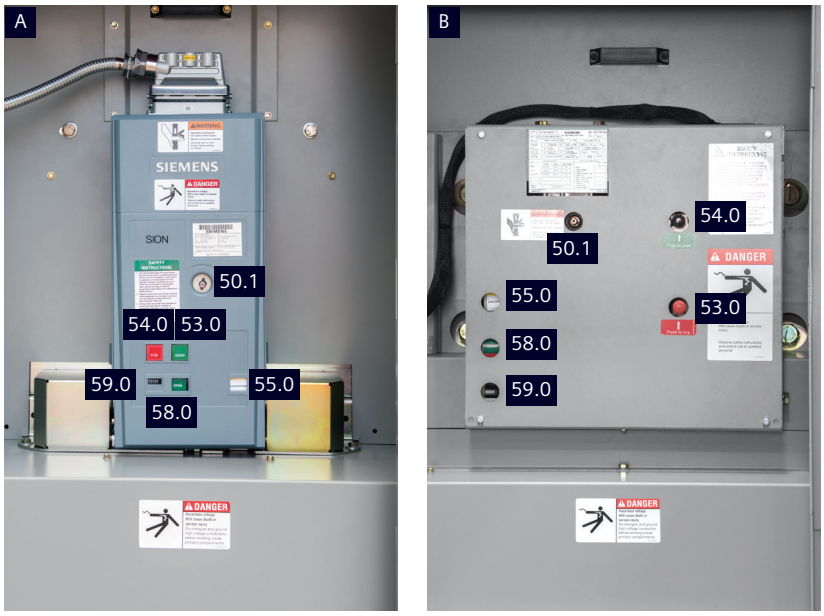

Item	Description
50.1	Manual-spring charging port
53.0	Manual CLOSE button
54.0	Manual OPEN/TRIP button
55.0	CHARGED/DISCHARGED indicator
58.0	OPEN/CLOSED indicator
59.0	Operations counter

Figure 32: Operating mechanism controls and indicators. Item A 25 kA circuit breaker. Item B 40 kA circuit breaker.

If a make contact is used, the coil is shorted out, and a resistor must be used to limit the current.

Motor-operating mechanism

The spring-charging motor is bolted to the charging-mechanism gear box installed in the mechanism housing. Neither the gear-box mechanism nor the motor require any normal maintenance.

Auxiliary switch

The auxiliary switch is actuated by a linkage to the jack shaft.

Mode of operation

The operating mechanism is of the stored-energy trip-free type. In other words, the charging of the closing spring is not automatically followed by the contacts changing position, and the tripping function prevails over the closing function in accordance with ANSI/IEEE C37.04-1999, clause 6.9.

When the stored-energy mechanism has been charged, the circuit breaker can be closed manually or electrically at any desired time. The mechanical energy for carrying out an "Open-Close-Open" sequence for auto-reclosing duty is stored in the closing and tripping springs.

Charging

When the charging mechanism is actuated by hand with a hand crank or by a motor, the flange turns until the driver locates in the cutaway part of the cam disc, thus causing the charging shaft to follow. The crank charges the closing spring.

When the closing spring has been fully charged, the crank actuates the linkage for the closing-spring CHARGED indicator, and actuates limit switches for interrupting the motor supply.

At the same time, the charging shaft is securely locked by the close-latch pawl.

Closing

If the circuit breaker is to be closed locally, the closing spring is released by pressing the close button. In the case of electrical control, the spring-release coil 52SRC unlatches the closing spring.

As the closing spring discharges, the charging shaft is turned by crank. The cam disc at the other end of the charging shaft actuates the drive lever, with the result that the jack shaft is turned.

As the jack shaft turns, the levers on the jack shaft operate the insulated couplers on the circuit breaker poles, change OPEN/CLOSED indicator to CLOSED, charge the tripping spring, and actuate the auxiliary switch through linkage. At the end the travel the circuit breaker is latched in the CLOSED position.

The crank on the charging shaft moves the linkage by acting on the control lever. The closing-spring CHARGED indication is thus canceled and, the limit switches switch in the control supply to cause the closing spring to recharge immediately.

Trip-free functionality

Trip-free functionality is accomplished by blocking movement of the close latch pawl when the manual trip pushbutton or associated locking provisions for preventing closing are in use (e.g., trip-free padlock provisions).

Opening

If the circuit breaker is to be tripped locally, the tripping spring is released by pressing the trip button. In the case of an electrical command being given, the shunt-trip coil 52T unlatches the tripping (opening) spring. The tripping spring turns the jack shaft; the sequence being similar to that for closing.

Rapid auto-reclosing

Since the closing spring is automatically recharged by the motor-operating mechanism when the circuit breaker has closed, the operating mechanism is capable of an "Open-Close-Open" duty cycle as required for rapid auto-reclosing.

The type SBVCB circuit breaker is suitable for use in applications with a rated reclosing-time interval of 0.3 seconds, per ANSI/IEEE C37.06-2009.

Manual operation

Electrically-operated vacuum circuit breakers can be operated manually if the control supply should fail.

Manually charging the closing spring

Insert the hand crank into the manual spring-charging port and turn it clockwise until the indicator shows CHARGED. The hand crank is coupled with the charging mechanism via an over-running coupling; thus the operator is not exposed to any risk should the control supply be restored during charging.

Manual closing

To close the circuit breaker, press the close button. The OPEN/CLOSED indicator will then display CLOSED and the closing-spring condition indicator will now read DISCHARGED.

Manual opening

The tripping spring is charged during closing. To open the circuit breaker, press the trip button and OPEN will be displayed by indicator.

Indirect releases (dual-trip or undervoltage) (optional)

The indirect release provides for the conversion of modest-control signals into powerful mechanical-energy impulses. It is primarily used to trip medium-voltage circuit breakers while functioning as a secondary (dual-trip) release or undervoltage-release device.

Figure 33: Operator sequence operation diagram

40 kA	25 kA	Description
LS21, LS22	S21, S22	Position switch. Closed when closing spring discharged.
L3	S3	Anti-pump circuit. Open when closing spring charged.
LS4, LS9	S4	Closing spring position switch. Open when closing spring discharged.

Diagram shows logic for 40 kA circuit breaker. For 25 kA circuit breaker, refer to alternate device designations at bottom of figure.

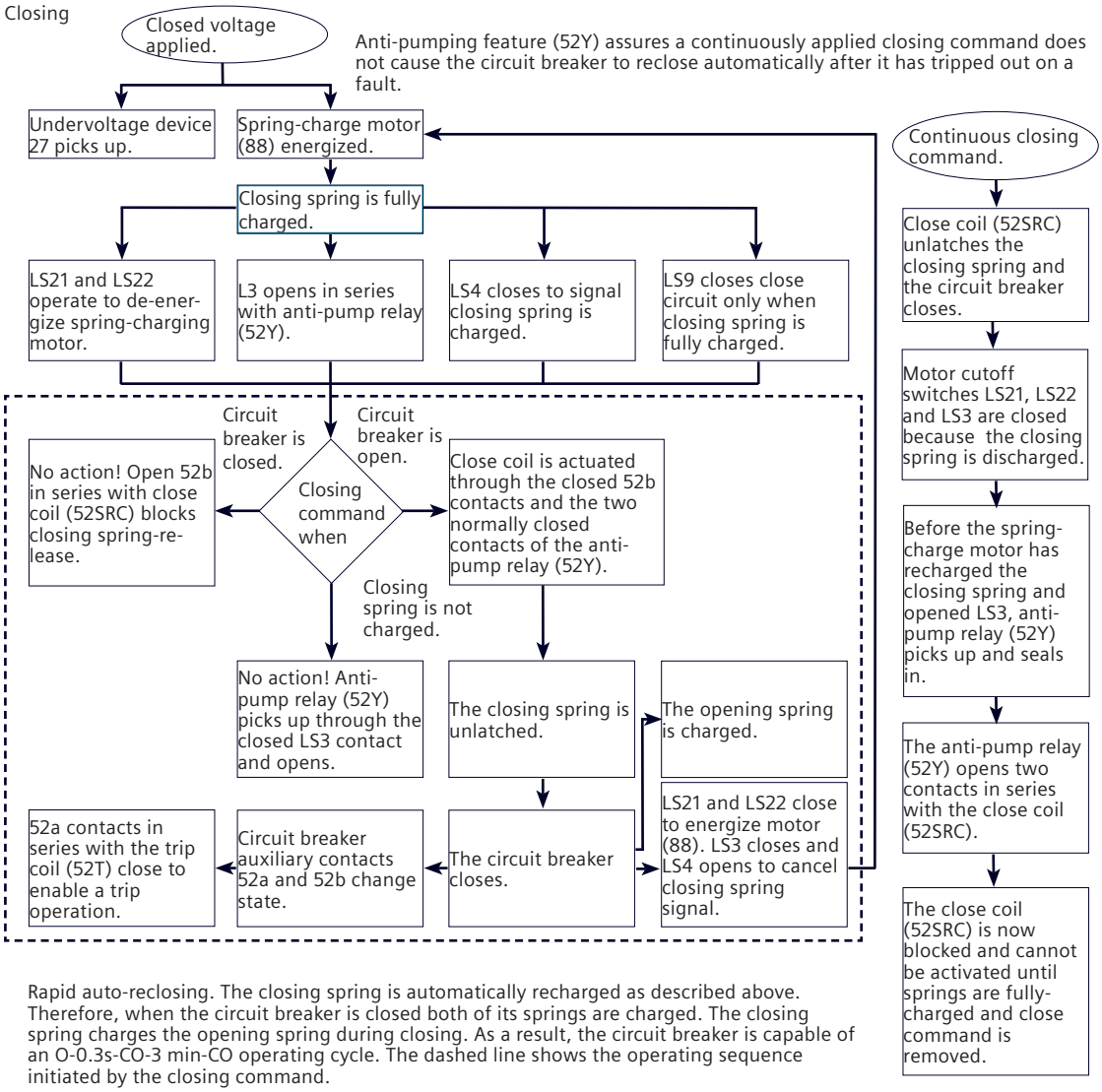

Rapid auto-reclosing. The closing spring is automatically recharged as described above. Therefore, when the circuit breaker is closed both of its springs are charged. The closing spring charges the opening spring during closing. As a result, the circuit breaker is capable of an O-0.3s-CO-3 min-CO operating cycle. The dashed line shows the operating sequence initiated by the closing command.

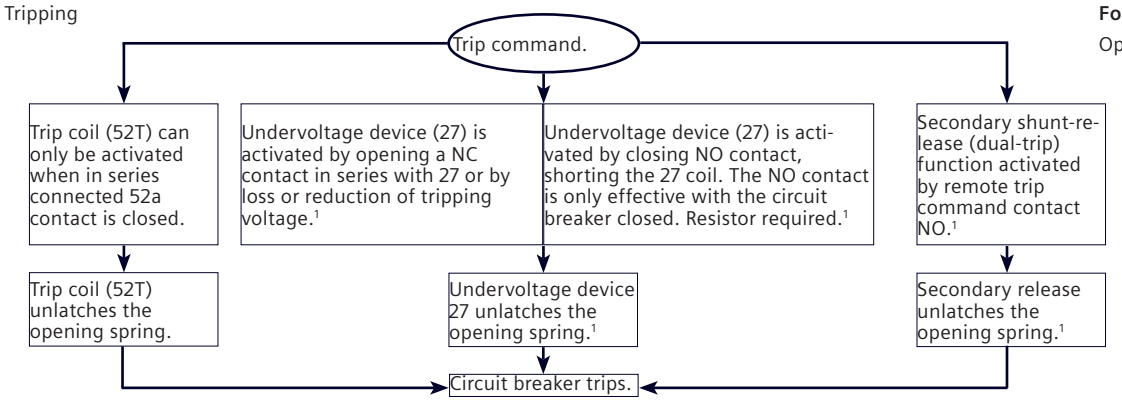

Footnote:
Optional items.

Figure 34a: Typical elementary diagram 25 kA

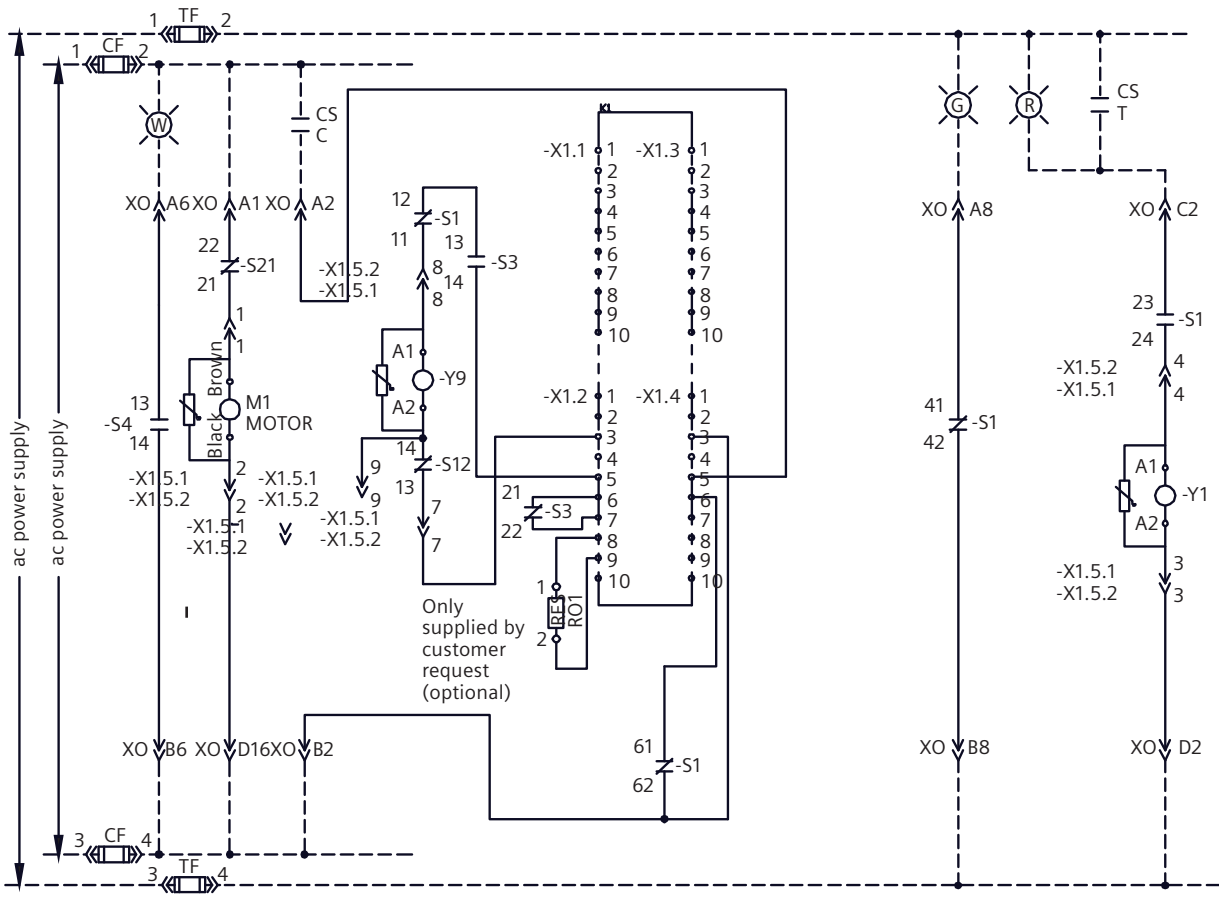

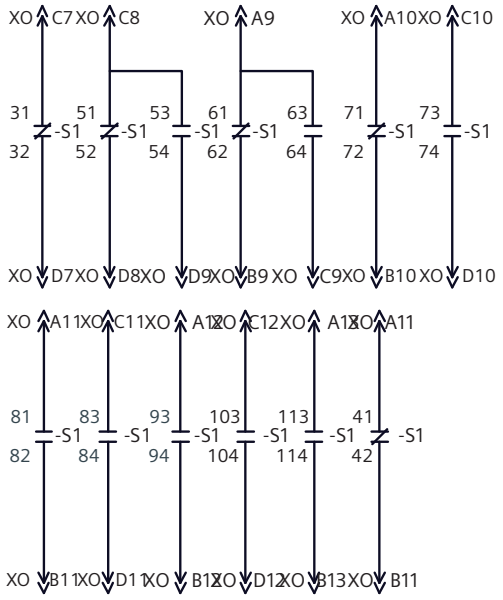

K1 - Contactor/anti-pumping
M1 - Motor
S1 - Auxiliary switch (open when circuit breaker is open)
S3 - Position switch/(control for K1)
S4 - Position switch/(closed when circuit breaker is charged)
S12 - Position switch/(prevents electrical closing with mechanical interlocking)
S21 - Position switch/(switches off motor after charging)
X0 - 40-pole plug
Y1 - First trip coil
Y2 - Second trip coil
Y7 - Undervoltage trip coil
Y9 - Close coil
R - Red indicating light (CLOSED)
G - Green indicating light (TRIP)
W - White indicating light (spring charged)
CS/C - Control switch (CLOSE)
CS/T - Control switch (TRIP)
CF - Circuit breaker control fuse (CLOSE)
TF - Circuit breaker control fuse (TRIP).

Figure 34b: Typical elementary diagram 40 kA

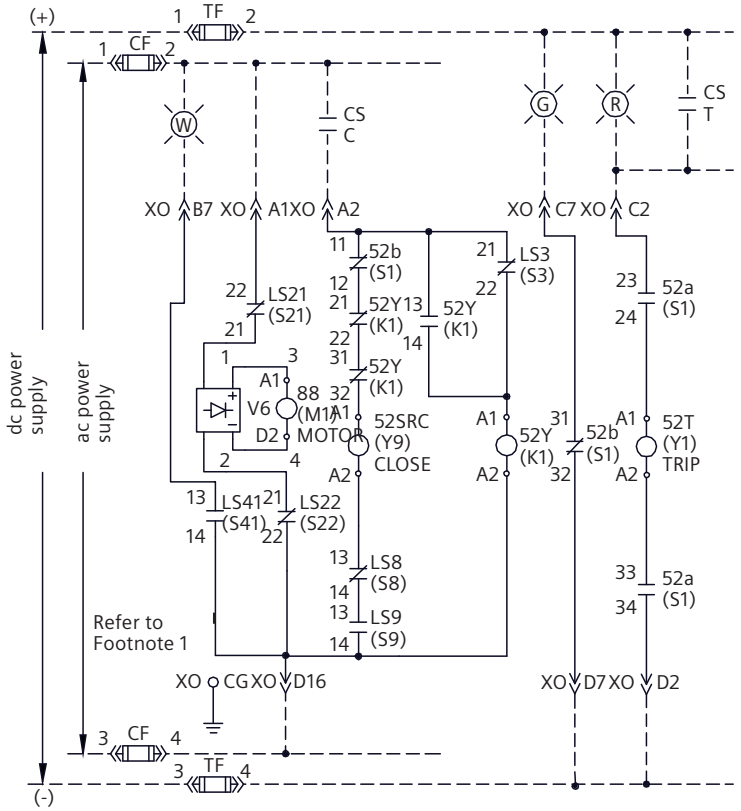

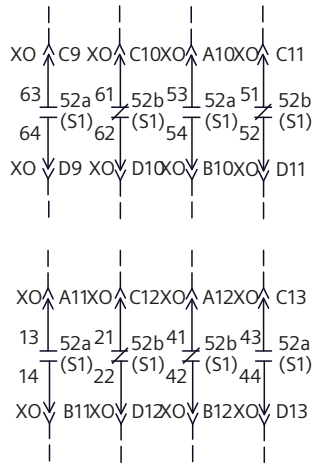

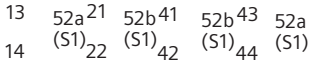

Not wired

52Y (K1) - Anti-pump relay

88 (M1) - Spring-charging motor

52a (S1) - Auxiliary switch is open when circuit breaker is open

52b (S1) - Auxiliary switch is closed when circuit breaker is open

LS3 (S3) - Anti-pump circuit is open when closing spring is charged

LS8 (S8) - Open close circuit when trip button is depressed

LS9 (S9) - Closing spring position switch is open when closing spring is discharged

LS21, LS22 (S21, S22) - Position switch (cut-off motor after spring charge)

LS41 (S41) - Closing spring position switch is open when closing spring is discharged

X0 - 64-pole plug

52T (Y1) - Shunt trip coil

52SRC (Y9) - Spring-release coil (CLOSE)

V6 - Rectifier module

R - Red indicating light (CLOSED)

G - Green indicating light (TRIP)

W - White indicating light (spring charged)

CS/C - Control switch (CLOSE)

CS/T - Control switch (TRIP)

LS - Spring-charged switch

CF - Circuit breaker control fuse (CLOSE)

TF - Circuit breaker control fuse (TRIP).

Standard:

Shown with closing springs discharged, circuit breaker open.

All wires are #14AWG SIS unless otherwise noted.

Footnote:

1. Ground bus to be located in low-voltage compartment and connections to be provided.

These releases are mechanical-energy storage devices. Their internal springs are charged as a consequence of the circuit breaker mechanism operation. This energy is released upon application or removal (as appropriate) of applicable control voltages (refer to Figure 35: Construction of secondary shunt release and Figure 36: Latch details and Figure 37: Undervoltage lock/operate selection on page 50).

Secondary shunt release (optional)

A secondary shunt release (second trip coil) is used for electrical tripping of the circuit breaker by protective relays or manual-control devices when more than one trip coil is required. The second trip coil is generally connected to a separate auxiliary supply (dc or ac) from the control supply used for the normal trip coil.

Undervoltage release (optional)

The undervoltage release is used for continuous monitoring of the tripping-supply voltage. If this supply voltage falls excessively, the undervoltage release will provide for automatic tripping of the circuit breaker.

The undervoltage device may be used for manual or relay tripping by employing a contact in series with an undervoltage-device holding-coil.

Relay tripping may also be achieved by employing a normally open contact in parallel with the holding coil. If this scheme is used, a resistor must be provided to limit current when the normally open contact is closed.

Secondary and undervoltage releases are available for all standard ANSI/IEEE control voltages.

Shown charged

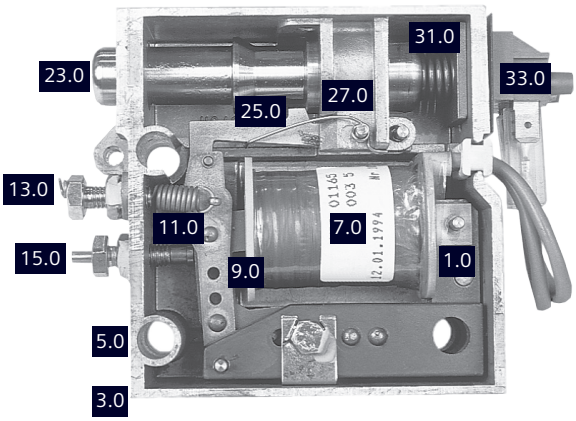

Item	Description
1.0	Magnet core
3.0	Housing
5.0	Mounting holes
7.0	Magnet coil
9.0	Magnet armature
11.0	Tension spring
13.0	Adjusting (factory-set) screw for 11.0

Item	Description
15.0	Tripping pin
21.0	Locking pin
23.0	Striker pin
25.0	Latch
27.0	Spring
31.0	Striker-pin spring
33.0	Terminal block

Figure 35: Construction of secondary shunt release

Shown charged

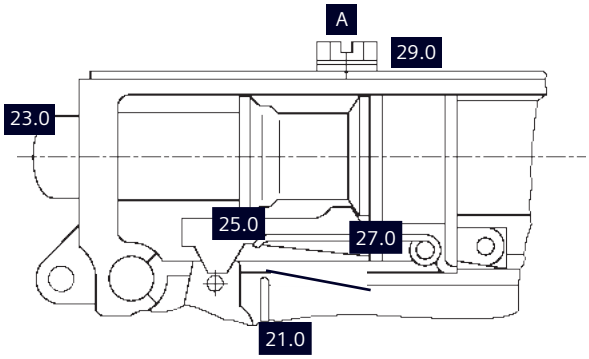

Item	Description
21.0	Locking pin
23.0	Striker pin
25.0	Latch
27.0	Spring
29.0	Lower connection terminal
A	Locked/unlocked selection screw (undervoltage release only)

Figure 36: Latch details

Position A: locked

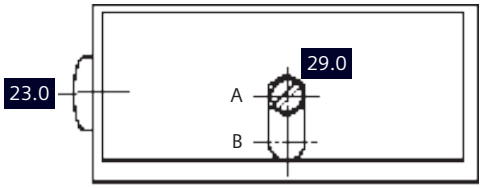

Position B: unlocked (operating position)

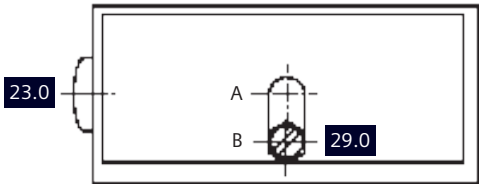

Cancel the lock for the undervoltage release by shifting the locking screw (29.0) from A to B.

Item	Description
23.0	Striker pin
29.0	Screw

Figure 37: Undervoltage lock/operate selection

Construction and mode of operation of secondary release and undervoltage release

The release consists of a spring power-storing mechanism, a latching device and an electromagnet. These elements are accommodated side-by-side in a housing, with a detachable cover and three through-holes for fastening screws. The supply leads for the trip coil are connected to a terminal block.

The energy-storing mechanism consists of the striker pin and its operating spring. When the spring is compressed, the striker pin is held by a latch. The other end of the latch is supported by a partly-milled locking pin that pivots in the cover sheets of the magnet armature. The armature pivots in front of the poles of the U-shaped magnet core, and is pulled away from it by the tension spring.

If the magnet coil of the shunt release 3AX1101 is energized by a trip signal, or if the tripping pin is mechanically actuated, magnet armature is swung against the pole faces.

When this happens, the latch loses its support and releases the striker pin, that is forced out by the spring.

On the undervoltage release 3AX1103, the latch is held by the locking pin as long as the armature is attracted (energized) (refer to Figure 33: Operator sequence operation diagram on page 45). If the circuit of the magnet coil is interrupted, the armature drops off, thus causing the latch to lose its support and release the striker pin.

Following every tripping operation, the striker pin must be reset to its normal position by loading the spring. This takes place automatically via the operating mechanism of the circuit breaker.

Since the striker pin of the undervoltage release 3AX1103 is latched only when the armature is attracted, this trip is provided with a screw (refer to Figure 37: Undervoltage lock/operate selection).

This screw is provided to allow locking the striker pin in the normal position for adjusting purposes or for carrying out trial operations during circuit breaker servicing. Position A (locked) disables the undervoltage release. Position B is the normal (operating) position.

Capacitor-trip device

The capacitor-trip device is an auxiliary tripping option providing a short-term means of storing adequate electrical energy to ensure circuit breaker tripping.

This device is applied in circuit breaker installations lacking independent auxiliary-control power or a station battery. In such installations, control power is usually derived from the primary source.

In the event of a primary-source fault, or disturbance with resulting reduction of the primary-source voltage, the capacitor-trip device will provide short-term tripping energy for circuit breaker opening due to the protective relay operation.

The capacitor trip includes a rectifier to convert the 120 or 240 Vac control voltage to a dc voltage that is used to charge a large capacitor to the peak of the converted-voltage wave (refer to Figure 38: Capacitor trip device).

The capacitor trip device is installed in the low-voltage protective device compartment.

Auxiliary switch

This switch provides auxiliary contacts for control of circuit breaker closing and tripping functions. Contacts are available for use in relaying and external logic circuits. This switch is driven by linkages connected to the jack shaft.

The auxiliary switch contains both “b” (normally closed) and “a” (normally open) contacts. When the circuit breaker is open, the “b” switches are closed and the “a” switches are open.

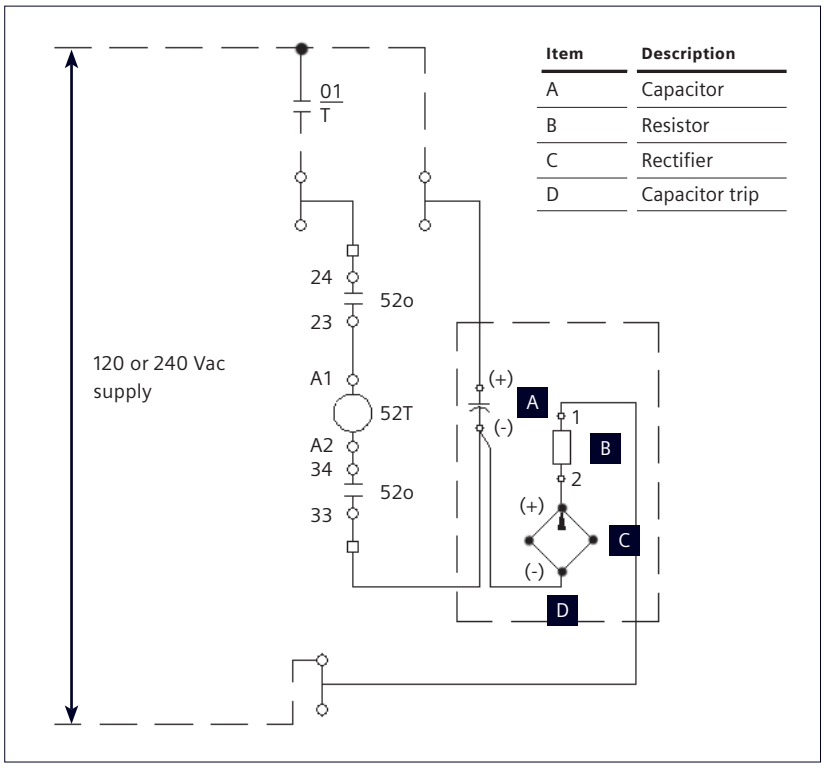

Item	Description
A	Capacitor
B	Resistor
C	Rectifier
D	Capacitor trip

Figure 38: Capacitor trip device

DANGER

Hazardous voltages.

Will cause death, serious injury, or property damage.

Disconnect, lockout, and ground incoming power and control voltage sources before beginning work on this or any other electrical equipment.

All pre-energization checks outlined in this instruction manual must be performed before the equipment is energized. This equipment should be energized by qualified personnel only.

DANGER

Hazardous voltages.

Will cause death, serious injury, or property damage.

Never defeat the door interlock if the switch blades are in the CLOSED position (ON) unless all incoming power is disconnected, grounded, and locked out.

Item	Description
A	Provision for mounting closed key interlock
B	Provision for padlocking closed
C	Provision for mounting open key interlock
D	Provision for padlocking open
E	Main door padlock provisions

Figure 39: Padlock and key lock provisions

Interlocks

The load-interrupter switch is mechanically interlocked as standard with the front compartment door such that the handle cannot be moved to the CLOSED (ON) position while the door is open and the front compartment door is not permitted to open except when the handle is in the OPEN (OFF) position.

The load-interrupter switch handle can be locked in the OPEN (OFF) position with a padlock, or with a padlock multiplier, with up to three padlocks (see Figure 39: Padlock and key lock provisions).

Optional key interlocks can be supplied with SIEBREAK switchgear. Schemes are available for locking the switch in the OPEN position or the CLOSED position as well as locking the main door closed related to the status of other equipment, for example the OPEN or CLOSED status of the circuit breaker (if supplied). Figure 39 shows the location of the key lock provisions for the load-interrupter switch.

Duplex switchgear configurations

Duplex switch switchgear configurations are a pair of two-position, load-interrupter switches (OPEN/CLOSED) with common load-side bus and either fuses or a circuit breaker to provide selection between two incoming sources.

As standard, this arrangement is supplied with key interlocks to ensure proper sequence of operation in addition to the standard compartment door interlock.

Each load-interrupter switch and each door comes with a lock cylinder and keys are coordinated with the locks to ensure that both load-interrupter switches must be locked in the OPEN (OFF) position to open either section front door. Additionally, if circuit breakers are provided versus fuses, the lock cylinders will not permit closing of the circuit breaker if both load-interrupter switches are open.

Normally, duplex switchgear sections do not have key interlocks to prevent closing both load-interrupter switches simultaneously, which allows use of the duplex switchgear sections in loop-through applications. Optionally, key interlocks can be provided to prevent having both load-interrupter switches closed at the same time.

Selector switchgear configurations

Selector switch switchgear configurations have a two-position, 600 A load-interrupter switch (OPEN/CLOSED) in series with a two-position disconnect switch (line one or line two).

The load-interrupter switch is identical to the standalone switch unit and can interrupt its rated load current.

The disconnect switch is mounted in the rear of the section and is operated from the front of the unit via an operating handle. This handle is interlocked with the enclosure front door such that the handle cannot be moved between positions while the door is open. Additionally, the front compartment door is not permitted to close except when the handle is fully in one of the defined positions. The position of the handle is visible by viewing windows on the enclosure front door as shown in Figure 40.

To operate the switch:

- Pull on the release knob on the load-interrupting switch operating handle located in the center of the operator casting to release the operating handle as shown in Figure 29: Operation of the load-interrupter switch on page 40.

Note: Failure to pull the release knob before attempting to operate handle may cause equipment damage.

- While holding the release knob, rotate the operator handle about 15 degrees or until resistive force is felt in the handle to prevent the knob and locating pin from resetting (as shown in Figure 29: Operation of the load-interrupter switch on page 40). At that point it is no longer necessary to hold the release knob.
- Continue rotating the handle 180 degrees downward, with a rapid, continuous motion, to the full OPEN position.
- Unlatch and open the enclosure front door.
- Grasp the disconnect switch handle firmly and using a continuous motion without hesitation or teasing, rotate the handle upward (or downward) to the desired position. Do not stop when resistance is felt until the handle is in the fully in the desired position. Do not leave the switch handle in a position between one of the fully connected positions. Do not force the enclosure front door closed if it makes contact with the switch handle as this is an indication that the switch may not be fully connected in either the line one or the line two position.

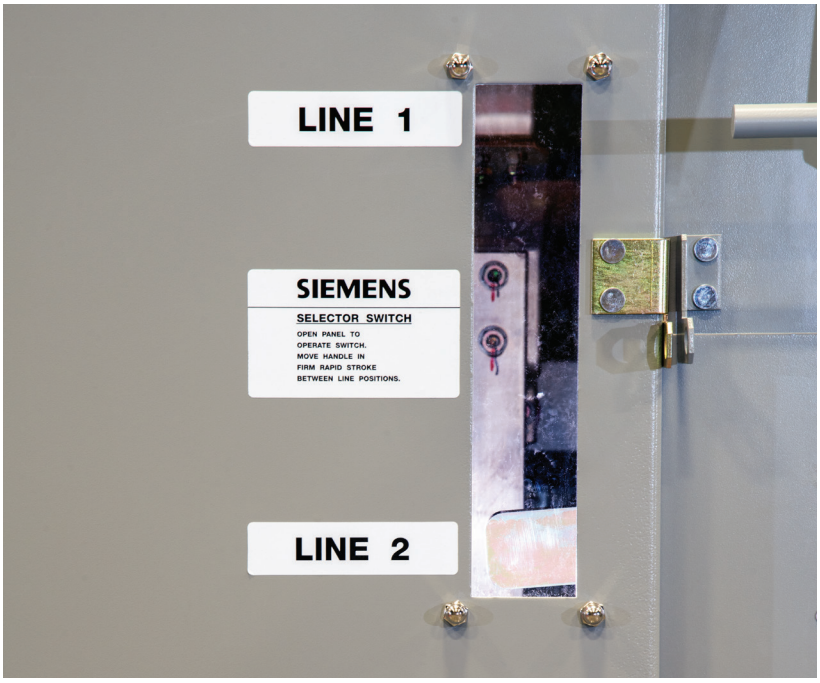

Figure 40: Selector switch position indicator (shown in line 2 position)

SIEBREAK AND SIEBREAK-VCB

Maintenance - general

DANGER

Hazardous voltages.

Will cause death, serious injury, or property damage.

Disconnect, lockout, and ground incoming power and control voltage sources before beginning work on this and any other electrical equipment.

WARNING

Failure to maintain the equipment could result in death, serious injury, or product failure and can prevent the successful functioning of connected apparatus.

The instructions contained herein should be carefully reviewed, understood, and followed.

General

This section describes maintenance activities generally applicable to SIEBREAK assemblies. For SIEBREAK-VCB assemblies, refer to Circuit breaker maintenance section beginning on page 66.

Introduction and maintenance intervals

Periodic inspections and maintenance are essential to obtain safe and reliable operation of the switchgear. When SIEBREAK switchgear is operated under “usual service conditions,” maintenance and lubrication is recommended at five-year intervals. “Usual” and “special” service conditions for metal-enclosed interrupter switchgear are defined in ANSI/IEEE C37.20.3, clauses 4 and 8.1.

Generally, “usual service conditions” are defined as an environment in which the equipment is not exposed to excessive dust, acid fumes, damaging chemicals, salt air, rapid or frequent changes in temperature, vibration, high humidity, and extremes of temperature.

The definition of “usual service conditions” is subject to a variety of interpretations. Because of this, the user is best served by adjusting maintenance and lubrication intervals based on the user’s experience with the equipment in the actual service environment.

Regardless of the length of the maintenance and lubrication interval, Siemens recommends that circuit breakers should be inspected and exercised annually.

For the safety of maintenance personnel as well as others who might be exposed to hazards associated with maintenance activities, the safety related work practices of NFPA 70E® should always be followed when working on electrical equipment. Maintenance personnel should be trained in the safety practices, procedures and requirements that pertain to their respective job assignments. This instruction manual should be reviewed and retained in a location readily accessible for reference during maintenance of this equipment.

The user must establish a periodic maintenance program to ensure trouble-free and safe operation. The frequency of inspection, periodic cleaning, and preventive maintenance schedule will depend upon the operation conditions. NFPA Publication 70B®, “Electrical Equipment Maintenance” may be used as a guide to establish such a program.

Note: A preventive maintenance program is not intended to cover reconditioning or major repair, but should be designed to reveal, if possible, the need for such actions in time to prevent malfunctions during operation.

Switchgear assemblies are enclosed on all sides and top with sheet metal. Access into the enclosure is provided by doors or removable covers.

Although the bus and connections may be insulated in SIEBREAK switchgear assemblies, it is a coordinated insulation system; insulation plus air or creep distance equals a given insulation level.

Note: Bus insulation is not designed to prevent shock.

DANGER

Hazardous voltages and high-speed moving parts.

Will cause death, serious injury, or property damage.

Do not contact energized bus. Before working on or near high-voltage conductors within switchgear, be sure they are de-energized and properly grounded.

DANGER

Failure to maintain the equipment could result in death, serious injury, or product failure and can prevent the successful functioning of connected apparatus.

The instructions contained herein should be carefully reviewed, understood, and followed.

The maintenance tasks in Maintenance task must be performed regularly.

DANGER

The use of unauthorized parts in the repair of the equipment or tampering by unqualified personnel will result in dangerous conditions that will cause death, serious injury, or equipment damage.

Follow all safety instructions herein.

Recommended hand tools

SIEBREAK switchgear uses both standard imperial (U.S. customary) and metric fasteners in the switchgear cubicles. Imperial (U.S. customary) fasteners are used in most locations in the switchgear enclosure and on both the load-interrupter and selector switches while metric fasteners are used on the circuit breaker.

Metric:

- Sockets and open-end wrenches: 7, 8, 10, 13, 17, 19 and 24 mm
- Hex keys: 5, 6, 8 and 10 mm
- Deep sockets: 19 mm
- Torque wrench: 0 - 150 Nm (0 - 100 ft-lbs).

SAE (U.S. customary):

- Socket and open-end wrenches: 5/16, 3/8, 7/16, 1/2, 9/16, 11/16, 3/4 and 7/8 inches
- Hex keys: 3/16 and 1/4 inches
- Screwdrivers: 0.032 x 1/4 inches wide and 0.055 x 7/16 inches wide
- Pliers
- Light hammer
- Dental mirror
- Flashlight
- Drift pins: 1/8, 3/16 and 1/4 inches
- Retaining-ring pliers (external type, tip diameter 0.038 inches).

Recommended fastener torque values

When making bolted connections, the following considerations should be generally followed. The recommended torque is determined by the size and type of hardware used as well as the materials of the parent materials in which the fastener is install. Refer to Table 3: Recommended torque values.

1. Metal-to-metal – Apply standard torque as listed.
2. Metal-to-insert molded in compound part – Apply approximately ⅔ of standard torque listed.
3. Compound-to-insert molded in compound part – Apply approximately ½ of standard torque listed.
4. Compound-to-compound – Apply approximately ½ of standard torque listed.

Footnote:

1. For bus connection, refer to section on bus joints on page 27 for proper torque.

Table 3: Recommended torque values

Thread size	Standard torque metal-to-metal (in lbs/N•m)[1]	⅔ standard torque metal-to-insert (in lbs/N•m)	½ standard torque compound-to-insert (in lbs/N•m)	½ standard torque compound-to-compound (in lbs/N•m)
8-32	14-201/1.6-2.3	10-14/1.0-1.6	7-10/0.8-1.2	7-10/0.8-1.2
10-32	20-30/2.3-3.4	13-20/1.6-2.3	10-15/1.2-1.8	10-15/1.2-1.8
1/4-20	40-60/4.5-6.8	26-40/3.2-4.5	20-30/2.3-3.4	20-30/2.3-3.4
5/16-18	168-228/19-25.8	110-150/12.4-17	84-114/9.5-13	84-114/9.5-13
3/8-16	240-360/27-41	160-240/18-27	120-180/13.5-20.5	120-180/13.5-20.5
1/2-13	480-600/54-68	320-400/36-45	240-300/27-34	240-300/27-34

Recommended maintenance and lubrication

Periodic maintenance and lubrication should include all the tasks shown in Table 4: Maintenance tasks. This list does not represent an exhaustive survey of maintenance steps necessary to verify safe operation of the equipment. Particular applications may require further procedures.

Accumulation of dust and foreign materials such as coal dust, cement dust, or lamp black must be removed from the switchgear and all surfaces must be wiped clean at regular intervals. Dust can collect moisture, causing voltage breakdown. Do not use compressed air as it will only redistribute contaminants on other surfaces.

Should further information be desired or should particular problems arise not covered sufficiently for the Purchaser's purposes, the matter should be referred to Siemens at +1 (800) 347-6659 or +1 (423) 262-5700 outside the U.S.

Table 4: Maintenance tasks

Description
1. Before any maintenance work is performed within primary compartments, make certain that the equipment is completely de-energized, tested, grounded, tagged or locked out and released for work in an authorized manner.
2. Before starting work on the controller, the following should be completed on any equipment that will affect the area of the work: A. Disable remote control scheme. B. De-energize all direct and backfeed power and control sources, test and ground. C. Open all disconnects.
3. Include the following items in your inspection procedure: A. Check general condition of switchgear installation. B. Inspect switchgear interior for accumulation of dust, dirt or any foreign matter. C. Clean any air filters by washing in any mild household detergent. D. Examine indicating lamps and replace as required. E. Check terminal block contacts for loose connections. F. Check instrument and control switches and inspect their contacts. G. Check for proper condition of instrument transformers. Replace burned out fuses, if any. Check primary and secondary connections. H. Remove dust from all insulators and insulation. I. Inspect bus bars and connections for proper condition. If bus bars or connections are overheating check for poor or loose connections or for overload. J. Examine all safety interlocks. K. Check space heaters and thermostat (if equipped) for proper operation. L. Maintain other equipment in accordance with the respective instruction manual requirements. M. Lubricate mechanisms, contacts, and other moving components. N. Replace, reassemble, re-insulate and return all items to proper operating conditions and remove grounds prior to energization.
4. Inspection items and tests: A. Power-path check: ■ Cleanliness check. B. Stored-energy operator-mechanism checks: ■ Maintenance and lubrication ■ Fastener check ■ Manual spring-charging check. C. Electrical-control checks: ■ Wiring and terminals checks ■ Secondary disconnect check ■ Automatic spring-charging check ■ Electrical close and trip check. D. High-potential test. E. Functional tests.

DANGER

Hazardous voltages.

Will cause death, serious injury, or property damage.

Read instruction manuals, observe safety instructions, and use qualified personnel.

Recommended maintenance and lubrication

Lubrication - mechanisms

It is essential that switchgear be lubricated carefully and properly to guard against corrosion and to ensure that all operating parts work freely.

The load interrupter switch requires infrequent lubrication. Bearing points and sliding surfaces should be lubricated at the regular inspection periods with a thin film of high-temperature lubricant. Before lubrication, remove any hardened grease and dirt from latch and bearing surfaces with kerosene, varsol, or naptha.

Note: Use of lubricant not suitable for the application will make the mechanism very difficult to operate.

Lubrication of electrical contacts for two-position selector switch

Lubricate stationary silver-surfaced contacts with electrical contact lubricant part no. 15-172-791-233 prior to use, as follows:

1. Wipe contacts clean.
2. Apply lubricant to contact surfaces.
3. Wipe off excess lubricant, leaving a film. Avoid getting lubricant on insulation.

Cleaning insulation

Most of the plastics and synthetics used in insulation systems are attacked by solvents containing aromatics or halogenated hydrocarbons. The use of these may cause crazing and deformation of the material reducing the dielectric strength. Isopropyl alcohol is the only recommended solvent cleaner.

Corrosive atmospheres

This switchgear is designed to give top performance when installed in normal indoor or outdoor locations. Where abnormal conditions, such as corrosive atmospheres, are encountered, special precautions must be taken to minimize their effect. Exposed metallic surfaces, non-insulated bus bars, disconnect switches, wire ends, instrument terminals, etc., must all be protected.

At each maintenance inspection, all of the old grease should be wiped off of the contacts and new lubricant applied to all sliding surfaces. Apply the contact lubricant in a layer .03-.06” (1-2 mm) thick. Use only Siemens electrical contact lubricant, part no. 15-172-791-233, available in 8 oz. (.23 kg) cans.

Other exposed components can be protected with a coat of Glyptol or other corrosion-resistant coating. When old grease becomes dirty, wipe the part clean and apply new grease immediately.

Protective relays and instruments

To insure satisfactory operation of protective relays and instruments, do not leave device covers off longer than necessary. When a cover has been broken, cover the device temporarily and replace broken glass as soon as possible.

Equipment surfaces

Inspect the painted surfaces and touch up scratches as necessary. Touch-up paint is available from Siemens. This paint matches the unit and is thinned and ready for use in one pint (473 ml3) spray cans.

Mechanical and electrical operation

1. Carefully inspect the doors, enclosure sides, and dead-front surfaces over all units for excessive heat. As a general rule, temperature which the palm of the hand cannot stand for about three seconds may indicate trouble. Infrared heat detectors are available for the purpose of detecting heat problems.
2. Inspect the switchgear a minimum of once each year, or more often as deemed necessary. Look for any moisture or signs of previous wetness or dripping inside the switchgear. Condensation in conduits or dripping from an outside source is a common cause of failure.
   a. Seal off any conduits that have dripped condensate, and provide an alternative means for the conduit to drain.
   b. Seal off any cracks or openings which have allowed moisture to enter the enclosure. Eliminate the source of any dripping on the enclosure and any other source of moisture.
   c. Replace and thoroughly dry and clean any insulating material which is damp or wet or shows any accumulation of deposited material from previous wetting. Conduct an electrical insulation-resistance test as detailed in Pre-energization inspection on page 35 in this instruction manual to verify the dielectric integrity of the affected insulation.
3. Check all devices for missing or broken parts, proper spring tension, free movement, rusting or corrosion, dirt, and excessive wear.
4. Examine all readily accessible insulating parts for cracks or breakage and for arc splatter, sooty deposits, or oil. Clean off arc splatter, oil, and sooty deposits, replace if any signs of burning, charring, or carbon tracking are found. Make sure that the dielectric integrity of the affected parts is maintained.

Load-interrupter switch maintenance and adjustment

Thorough inspection at periodic intervals is important to satisfactory operation of the load-interrupter switch. Conditions affecting maintenance are operating environment, experience of operating personnel, equipment loading, and any special operational requirements.

It is recommended that the following inspections be performed on the load-interrupter switch at least once per year or after 100 operations of a 600 A switch or 20 operations of a 1,200 A switch. More frequent inspections may be necessary if local conditions require (refer to Figure 28: Load-interrupter switch components on page 40).

DANGER

Hazardous voltages and high-speed moving parts.

Will cause death, serious injury, or property damage.

Do not work on energized equipment. Always de-energize and ground the equipment before working on the equipment.

Load-interrupter switch maintenance

1. Perform a visual inspection of all surfaces including insulators, operating arms, mechanisms, pushrods, etc., for dust and dirt accumulation. Remove any dirt and dust by wiping surfaces with a clean cloth.
2. Inspect the bus bars and cable connections to see that they are in proper condition. If they show signs of having overheated, check for loose connections and re-tighten as required referring to Table 3: Recommended torque values on page 56.
3. Check the condition of the main contacts, quick-break blades, and arc chutes. Replace any worn or damaged parts.
4. Check to determine that the blades make good contact. A contact-resistance measurement between jaw-spade terminal and hinge-spade terminals should be taken and should be between 35 to 100 micro-ohms. These contacts do not tarnish like copper, but they should be wiped clean occasionally, especially if the switch has not been operated for some time. This can be done by opening and closing the switch several times in succession.

Note: Do not attempt to polish or clean the blades with powdered emery, scouring pads, or other abrasives. This will inevitably result in poor contact and overheating.

5. Examine all insulation carefully for signs of tracking. Special attention must be given to areas where the conductor passes through an insulator or lays near a barrier. Examine the surface for cracks or streaked discoloration. When tracking is found, the insulation involved must be replaced.
6. Check that the front and rear latches of the operating mechanism, which are spring operated, rotate freely up and down by using finger pressure on the rollers.
7. Apply high-temperature lubricant (silicone or molybdenum based) to contact component surfaces subject to abrasion. Hydrocarbon-based grease may be applied very sparingly to bearings, linkages, sprockets, and drive chains not directly associated with the current-carrying components.

Load-interrupter switch main blade alignment and adjustment

1. Verify that all sources of primary power are disconnected, and using the operating handle, close the load-interrupter switch.
2. Disconnect the pushrods by removing the cotter pins and clevis pins that connect pushrods to the operating arms of each pole of the switch. See Figure 41.
3. Disengage the switch blades by pulling outward on the main switch blade until the main blades are separated from the jaw casting. Continue to pull outward until the arcing blade disengages from the arc chute. See Figure 42.

Note: The quick-acting blade is under spring pressure and snaps open when clear of the stationary arcing contacts within the arc chute.

4. If the main blades do not align with the jaw contacts, loosen the hinge casting-mounting bolts and move the pole assembly. Then re-tighten the bolts. See Figure 43.
5. Check that the jaw-casting contact surfaces align with the main blades. If necessary to adjust, loosen the jaw-casting mounting bolts, tap on the spade terminal to align, then re-tighten the bolts. See Figure 44.
6. Reconnect the pushrods by re-installing the clevis pins that connect pushrods to the operating arms of each pole of the switch. Install new cotter pins; do not reuse cotter pins.

DANGER

Hazardous voltages.

Will cause death, serious injury, or property damage.

Do not work on energized equipment. Always de-energize and ground the equipment before working on the equipment.

Figure 41: Disconnect pushrods

Figure 42: Disengage switch blades

Figure 43: Loosen casting mounting bolts

Figure 44: Reconnect pushrods

DANGER

Hazardous voltages and high-speed moving parts.

Will cause death, serious injury, or property damage.

Do not work on energized equipment. Always de-energize and ground the equipment before working on the equipment.

Load-interrupter switch quick-acting blade alignment and adjustment

Disconnect the pushrods by removing the cotter pins and clevis pins that connect pushrods to the operating arms of each pole of the switch (refer to Figure 41). Slowly move the blade in and out to check for proper alignment of the quick-acting blade with the opening in the arc chute. If necessary, adjust by loosening the jaw casting-mounting bolts and lightly tapping the arc-chute mounting bracket. Then, re-tighten bolts.

Note: If any corrections to the quick-acting blade position are necessary (after all previous steps have been completed), they may be done by loosening the locknut on the arcing-blade adjusting screw (see Figure 46) and turning screw either in or out to obtain positioning of quick-acting blade. Re-tighten locknut.

Figure 45: Checking proper alignment

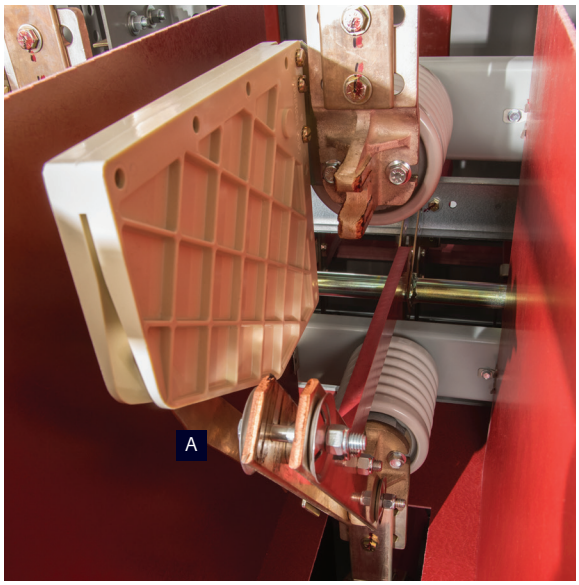

Figure 46: Arcing-blade adjusting screw

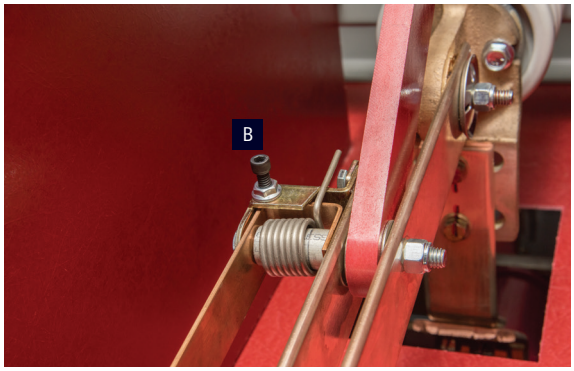

Item	Description
A	Quick-acting blade
B	Arcing-blade adjusting screw

Load-interrupter switch hinge-contact pressure adjustment

Disconnect the pushrods by removing the cotter pins and clevis pins that connect pushrods to the operating arms of each pole of the switch (refer to Figure 41). Open the load-interrupter switch until the quick-acting blade just clears the arc chute and connect a spring scale to the main blades approximately 1-1/2" below the jaw contact as shown in Figure 47.

Note: Some switches are equipped with an aluminum spacer bar just below the jaw. This provides a convenient point to connect the scale. On other switches, use a tee adapter allowing equal force on both blades.

A force of two to four pounds should be necessary to move the blades. Loosen or tighten the hinge bolt as necessary to meet the two to four pound requirement.

DANGER

Hazardous voltages and high-speed moving parts.

Will cause death, serious injury, or property damage.

Do not work on energized equipment. Always de-energize and ground the equipment before working on the equipment.

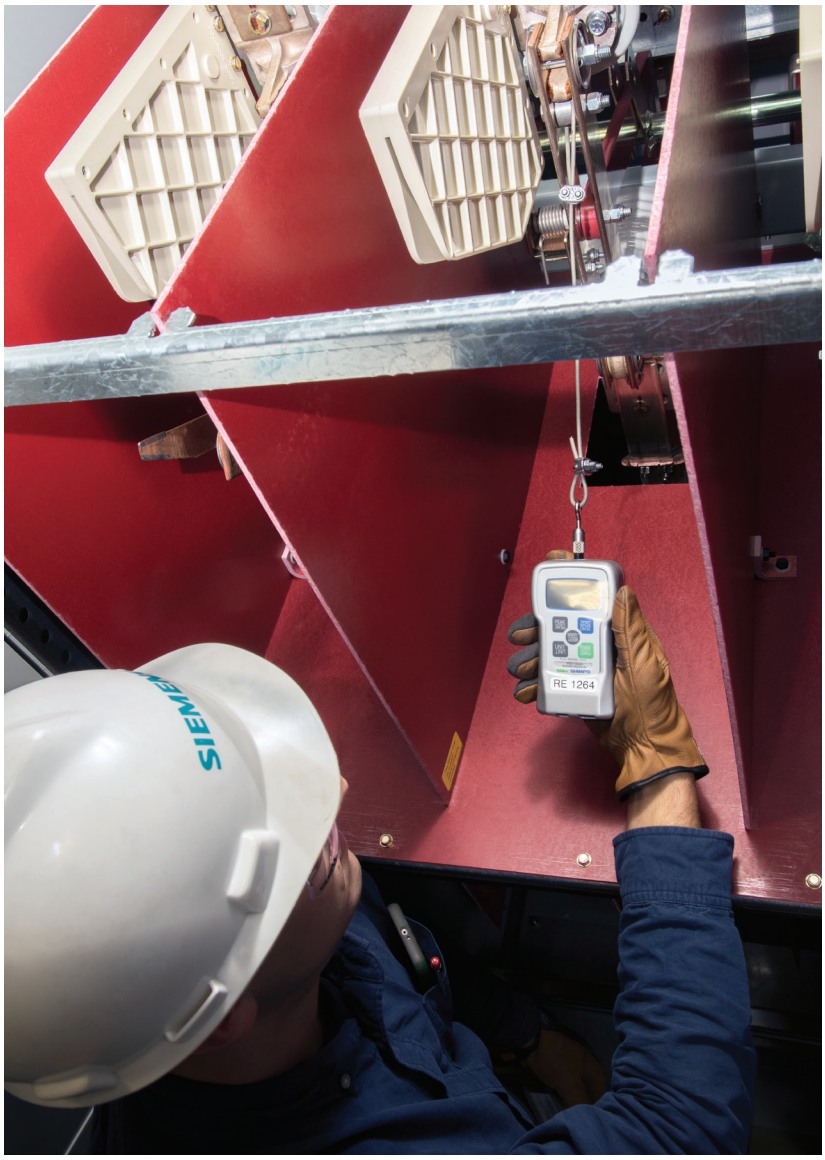

Figure 47: Use of spring scale for switch blade adjustment

DANGER

Hazardous voltages and high-speed moving parts.

Will cause death, serious injury, or property damage.

Do not work on energized equipment. Always de-energize and ground the equipment before working on the equipment.

Load-interrupter switch jaw-contact pressure adjustment

1. Verify that the load-interrupter switch is closed.
2. Connect a spring scale to the main blades approximately 1-1/2" below the jaw contact as shown in Figure 46: Use of spring scale for switch blade adjustment on page 62.

Note: Some switches are equipped with an aluminum spacer bar just below the jaw. This provides a convenient point to connect the scale. On other switches, use a tee adapter allowing equal force on both blades.

A force of 30-36 lbs (133-160 N) should be necessary to move the switch blades. Loosen or tighten the jaw contact bolts as necessary to meet the 30 to 36 pounds requirement.

Selector switch maintenance and adjustment

Thorough inspection at periodic intervals is important to satisfactory operation of the selector switch. Conditions affecting maintenance are operating environment, experience of operating personnel, equipment loading, and any special operational requirements.

It is recommended that the following inspections be performed on the selector switch at least once per year or after 50 operations. More frequent inspections may be necessary if local conditions require (refer to Figure 48).

Figure 48: Selector switch components

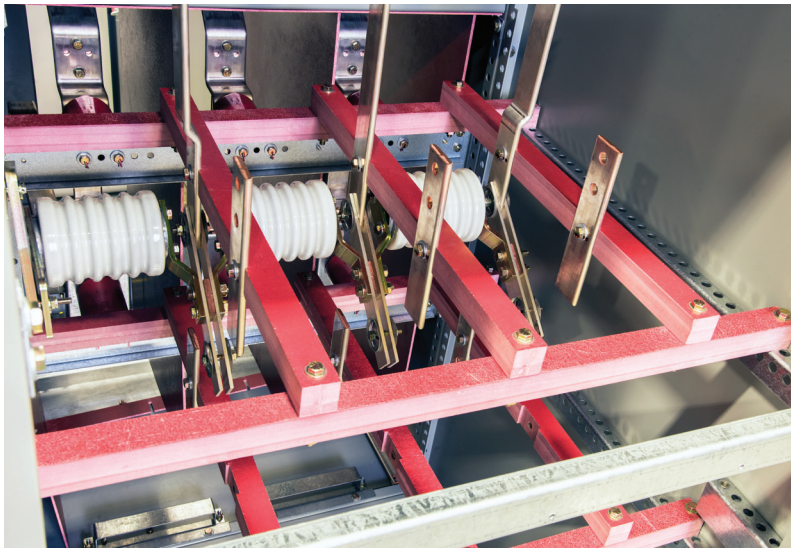

1. Perform a visual inspection of all surfaces including insulators, operating arms, mechanisms, pushrods, etc., for dust and dirt accumulation. Remove any dirt and dust by wiping surfaces with a clean cloth.
2. Inspect the bus bars and cable connections to see that they are in proper condition. If they show signs of having overheated, check for loose connections and re-tighten as required referring to Table 3: Recommended torque values on page 56.
3. Check the condition of the main contacts, including both fixed and moving contacts and replace any worn or damaged parts.
4. Check to determine that the blades make good contact. A contact-resistance measurement between the fixed and moving contact terminals should be taken and should be 350 micro-ohms or lower. These contacts do not tarnish like copper, but they should be wiped clean occasionally, especially if the switch has not been operated for some time. This can be done by opening and closing the switch several times in succession.

Note: Do not attempt to polish or clean the blades with powdered emery, scouring pads, or other abrasives. This will inevitably result in poor contact and overheating.

5. Examine all insulation carefully for signs of tracking. Special attention must be given to areas where the conductor passes through an insulator or lays near a barrier. Examine the surface for cracks or streaked discoloration. When tracking is found, the insulation involved must be replaced.
6. Lubricate contact surfaces of the fixed contacts and moving contacts of the two-position selector switch with electrical contact lubricant, part no. 15-172-791-233. Avoid getting lubricant on insulation.
7. Hydrocarbon-based grease may be applied, very sparingly to bearings, linkages, sprockets, and drive chains not directly associated with the current carrying components.

DANGER

Hazardous voltages and high-speed moving parts.

Will cause death, serious injury, or property damage.

Do not work on energized equipment. Always de-energize and ground the equipment before working on the equipment.

WARNING

The use of unauthorized parts in the repair of the equipment or tampering by unqualified personnel can result in hazardous conditions, that can result in death, serious injury, or property damage.

Follow all safety instructions contained herein.

SIEBREAK AND SIEBREAK-VCB

Maintenance - circuit breaker

⚠ WARNING

Failure to maintain the equipment can result in death, serious injury, property damage or product failure, and can prevent successful functioning of connected apparatus.

The instructions contained herein should be carefully reviewed, understood and followed.

The maintenance tasks in Table 4 must be performed regularly.

General

This section describes additional maintenance activities for the vacuum circuit breaker in SIEBREAK-VCB assemblies, in addition to the maintenance applicable generally to SIEBREAK assemblies, beginning on page 54.

Recommended maintenance and lubrication

Periodic maintenance and lubrication should include all the tasks shown in Table 4: Maintenance tasks on page 57.

Recommended procedures for each of the listed tasks are provided in this section of the instruction manual.

The list of tasks in Table 4: Maintenance tasks on page 57 does not represent an exhaustive survey of maintenance steps necessary to ensure safe operation of the equipment.

Particular applications may require further procedures. Should further information be desired or should particular problems arise not covered sufficiently for the Purchaser's purposes, the matter should be referred to Siemens at +1 (800) 347-6659 or +1 (423) 262-5700 outside the U.S.

Disconnecting from switchgear

Prior to performing any inspection or maintenance checks or tests, the circuit breaker must be disconnected from the switchgear.

1. The first step is to de-energize the circuit breaker. Depressing the trip pushbutton opens the circuit breaker.
2. The second step is to de-energize control power to the circuit breaker. Open the control-power disconnect device.
3. Perform the spring discharge check. This is done by first depressing the red trip pushbutton. Second, depress the black close pushbutton. Third, depress the red trip pushbutton again, and observe the spring condition indicator. It should read DISCHARGED.

Checks of the primary power path

The primary power path consists of three vacuum interrupters and the bus work that connects the circuit breaker to the switchgear. These components are checked for cleanliness and condition.

Cleanliness check

All of these components must be cleaned and free of dirt or any foreign objects. Use a dry lint-free cloth. For stubborn dirt, use a clean cloth saturated with isopropyl alcohol (except on a vacuum interrupter).

For stubborn dirt on a vacuum interrupter, use a cloth and warm water and a small amount of mild liquid-household detergent as a cleaning agent. Dry thoroughly using a dry lint-free cloth.

Inspection of primary bus connections

Inspect the connections for any evidence of burning or pitting that would indicate weakness of the electrical connection.

Inspect the bus connections for physical integrity and absence of mechanical damage.

Inspect the flexible connectors that connect the bottom movable-contacts of the vacuum interrupters to the lower terminals for tightness and absence of mechanical damage, burning or pitting.

Checks of the stored-energy operator mechanism

The stored-energy operator checks are divided into mechanical and electrical checks for simplicity and better organization. This first series of checks determine if the basic mechanism is clean, lubricated and operates smoothly without control power. The contact-erosion check of the vacuum interrupter is also performed during these tasks.

Maintenance and lubrication

The maintenance and lubrication interval for Siemens type SBVCB circuit breakers is recommended to be every 10 years or 10,000 closing operations (which ever comes first).These intervals assume the circuit breaker is operated under “usual service conditions” as discussed in ANSI/IEEE C37.20.3, section 8.1, and C37.04, section 4, together with C37.010, section 4. The maintenance and lubrication interval is the lesser of the number of closing operations or the time interval since last maintenance.

The vacuum-interrupter operator mechanism is shown in Figure 49: 40 kA operator mechanism lubrication, with the front cover and the operator-control panel removed to show construction details.

Clean the entire stored-energy operator mechanism with a dry, lint-free cloth.

Check all components for evidence of excessive wear.

Place special attention on the closing spring-crank and the various pushrods and linkages.

The 25 kA type SBVCB circuit breaker operating mechanism does not typically require lubrication at normal maintenance intervals if the circuit breaker is operated under “usual service conditions”.

The 40 kA type SBVCB circuit breaker typically requires lubrication of all non-electrical moving or sliding surfaces with a light coat of synthetic grease or oil.

Lubricants composed of ester oils and lithium thickeners will generally be compatible. For all lubrication (except electrical moving or sliding surfaces), use one of the following:

- Klüber Isoflex Topas L32 (part 3AX11333H)
- Klüber Isoflex Topas L32N (spray) (part 15-172-879-201).

Source:

- Klüber Isoflex Topas L32 or L32N:Klüber Lubrication North America L.P. www.klueber.com.

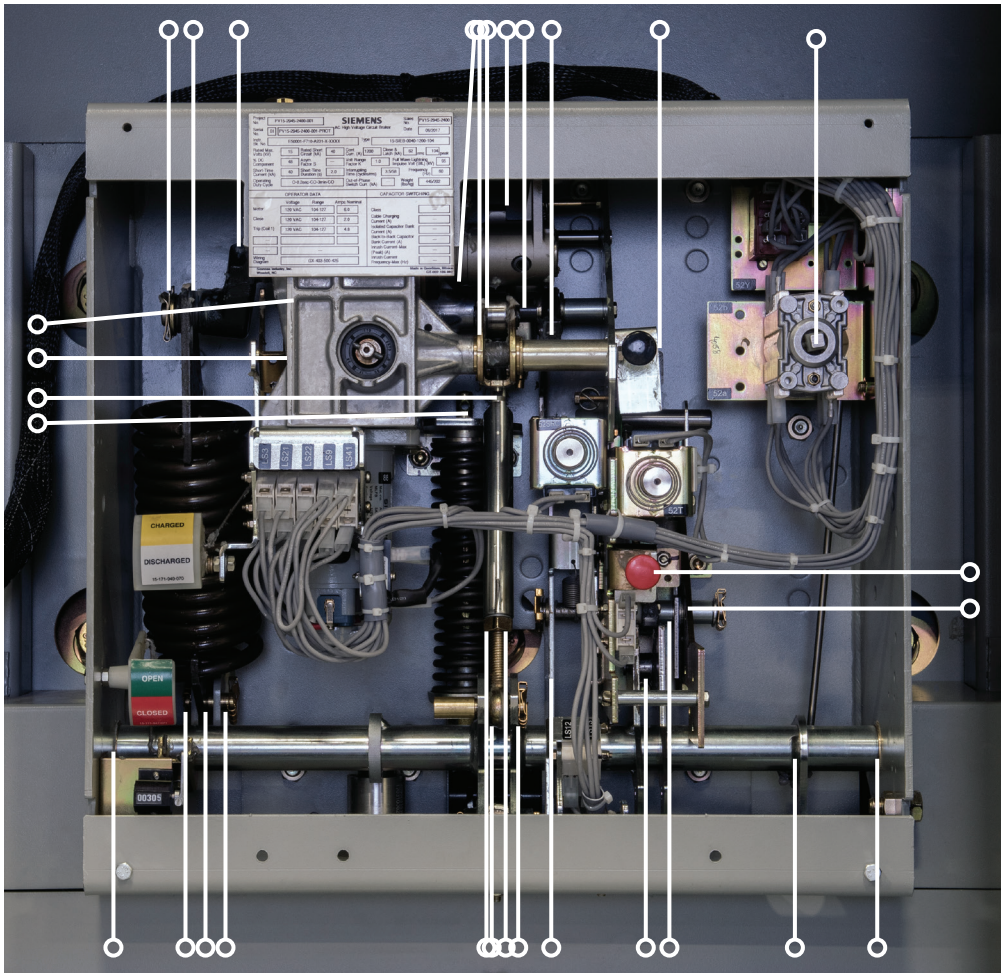

Figure 49: 40 kA operator mechanism lubrication

Klüber L32 or Klüber

Typical for all three phases

⚠ WARNING

High-speed moving parts.

Can result in serious injury.

Tripping spring is charged. If trip latch is moved, the stored-energy springs will discharge rapidly.

Stay clear of circuit breaker components subject to sudden, high-speed movement.

Fastener check

Inspect all fasteners for tightness. Both locknuts and retaining rings are used. Replace any fasteners that appear to have been frequently removed and replaced.

Manual-spring charging and checks

Perform the manual-spring charging check in the section “Inspection and testing” on page 35. The key steps of this procedure are repeated here.

1. Insert the hand-charging crank into the manual-charge socket at the front of the operator control-panel. Turn the crank clockwise (about 48 revolutions) to charge the closing spring. Continue cranking until the CHARGED flag appears in the window of the spring-indicator.
2. Press the close pushbutton. The contact-position indicator on the operator-control panel should indicate the circuit breaker contacts are CLOSED.
3. Press the trip pushbutton. Visually verify the DISCHARGED condition of the closing springs and the circuit breaker contacts are OPEN.
4. Press the close pushbutton. Nothing should happen. The manual-spring check should demonstrate smooth operation of the operating mechanism.

Electrical-control checks

The electrical controls of the type SBVCB vacuum circuit breaker should be checked during inspection to verify absence of any mechanical damage, and proper operation of the automatic-spring charging and close and trip circuits.

Unless otherwise noted, all of these tests are performed without any control power applied to the circuit breaker.

Wiring and terminals check

1. Physically check all of the circuit breaker wiring for evidence of abrasion, cuts, burning or mechanical damage.
2. Check all terminals to be certain they are solidly attached to their respective device.

Automatic spring-charging check (control power required)

Repeat the automatic spring-charging check described in “Inspection and testing” on page 35.

Primary tasks of this check are:

1. The circuit breaker is energized with control power for this check.
2. Energize the control-power source.
3. When control power is connected to the circuit breaker, the closing springs should automatically charge. Visually verify the closing springs are charged.

Note: A temporary source of control power and test leads may be required if the control-power source has not been connected to the switchgear. When control power is connected to the type SBVCB vacuum circuit breaker, the closing springs should automatically charge.

Electrical close and trip check (control power required)

A check of the circuit breaker control circuits is performed. This check is made with the circuit breaker energized by control power from the switchgear.

1. Once the circuit breaker springs are charged, move the switchgear-mounted close/trip switch to the close position. There should be both the sound of the circuit breaker closing and indication the circuit breaker contacts are CLOSED by the main contact status indicator.

DANGER

Hazardous voltages and high-speed moving parts.

Will cause death, serious injury, or property damage.

Read instruction manuals, observe safety instructions and use qualified personnel.

2. As soon as the circuit breaker has closed, the automatic spring-charging process is repeated.
3. After a satisfactory close operation is verified, move the switchgear-mounted close/trip switch to the trip position, or send a trip command from a protective relay. Verify by both sound and contact position that the contacts are open. Completion of these checks demonstrates satisfactory operation of auxiliary switches, internal protective relays and solenoids.

Spring-charging motor checks

No additional checks of the spring-charging motor are necessary.

Vacuum interrupter

The life expectancy of a vacuum interrupter is a function of the number of interruptions and magnitude of current interrupted.

A vacuum interrupter must also be replaced at 10,000 mechanical operations or when the contacts have been eroded beyond allowed limits.

Vacuum interrupter replacement procedures are detailed in the following maintenance instructions.

Before putting the circuit breaker into service, or if a vacuum interrupter is suspected of leaking as a result of mechanical damage, perform a vacuum-integrity check electrically using a high-potential test set as described in the next section.

DANGER

High-potential tests employ hazardous voltages.

Will cause death and serious injury.

Follow safe procedures, exclude unnecessary personnel and use safety barriers. Keep away from the circuit breaker during application of test voltages. Disconnect the secondary plug from the top of the circuit breaker to electrically disconnect the circuit breaker control circuits from the switchgear before conducting high-potential tests.

WARNING

Vacuum interrupters may emit X-ray radiation.

Can result in serious injury.

Keep personnel more than six feet away from a circuit breaker under test.

X-rays can be produced when a high-voltage is placed across two circuit elements in a vacuum.

Table 5: High-potential test voltage

Rated maximum voltage kV (rms)	Rated power-frequency withstand kV (rms)	Field test voltage kV rms	Field test voltage kV dc
4.76	19	14.3	20
8.25	36	27	38
15.0	36	27	38

High-potential tests

The next series of tests (vacuum integrity and insulation) involve use of high-voltage test equipment. The switchgear under test should be inside a suitable test-barrier equipped with warning lights; the load-interrupting switch in the switchgear section should be open and all load-side connections should be disconnected and isolated electrically.

Vacuum-integrity check (using dielectric test)

A high-potential test is used to verify the vacuum integrity of the circuit breaker. The test is conducted on the circuit breaker with its primary contacts in the OPEN position.

High-potential test voltages

The voltages for high-potential tests are shown in Table 5: High-potential test voltages.

Note: Do not use dc high-potential testers incorporating half-wave rectification. These devices produce high-peak voltages.

High-peak voltages will produce X-ray radiation. DC testers producing excessive peak-voltages also show erroneous readings of leakage current when testing vacuum circuit breakers.

Vacuum-integrity test procedure

1. Observe safety precautions listed in the DANGER and WARNING advisories. Construct the proper barrier and warning light system.
2. Ground the frame of the circuit breaker, and ground each pole not under test.
3. Apply test voltage across each pole for one minute (circuit breaker OPEN).
4. If the pole sustains the test voltage for that period, its vacuum integrity has been verified.

Note: This test includes not only the vacuum interrupter, but also the other insulation components in parallel with the vacuum interrupter. These include the standoff insulators and the insulated drive-links, as well as the insulating (tension) struts between the upper and lower vacuum-interrupter supports. If these insulation components are contaminated or defective, the test voltage will not be sustained. If so, clean or replace the affected components, and retest.

As-found insulation and contact-resistance tests

As-found tests verify the integrity of the circuit breaker insulation system. Megger* or insulation-resistance tests conducted on equipment prior to installation provide a basis of future comparison to detect changes in the protection afforded by the insulation system.

A permanent record of periodic as-found tests enables the maintenance organization to determine when corrective actions are required by watching for significant deterioration in insulation resistance, or increases in contact resistance.

Insulation and contact-resistance test equipment

In addition to the high-potential test equipment capable of test voltages as listed in Table 5: High-potential test voltages on page 70, the following equipment is required:

- AC high-potential tester with test voltage of 1,500 volts, 60 Hz
- Test equipment for contact-resistance tests.

Insulation and contact-resistance test procedure

1. Observe safety precaution listed in the DANGER and WARNING advisories for the vacuum-integrity check tests.
2. Close the circuit breaker. Ground the frame of the circuit breaker, and ground each pole not under test. Use manual charging, closing and tripping procedures.
3. Apply the proper ac or dc high-potential test voltage as shown in Table 5 between a primary conductor of the pole and ground for one minute.
4. If no disruptive discharge occurs, the insulation system is satisfactory.
5. After test, ground both ends and the center metal section of each vacuum interrupter to dissipate any static charge.
6. Disconnect the leads to the spring-charging motor.
7. Connect all points of the secondary disconnect with a shorting wire. Connect the shorting wire to the high-potential lead of the high-voltage tester and ground the circuit breaker housing. Starting with zero volts, gradually increase the test voltage to 1,500 volts rms, 60 Hz. Maintain test voltage for one minute.
8. If no disruptive discharge occurs, the secondary-control insulation level is satisfactory.
9. Disconnect the shorting wire and re-attach the leads to the spring-charging motor.
10. Perform contact-resistance tests of the primary circuit from the load side of the load-interrupting switch and the outgoing switchgear terminals. Contact resistance should not exceed 350 micro-ohms for 25 kA switchgear and 300 micro-ohms for 40 kA switchgear.

Inspection and cleaning of circuit breaker insulation

1. Perform the spring discharge check on the circuit breaker after all control power is removed. The spring discharge check consists of:
   A. Depressing the red trip pushbutton
   B. Depressing the black close pushbutton, and
   C. Depressing again the red trip pushbutton. All of these controls are on the circuit breaker front panel. Visually verify the DISCHARGED condition of the springs.
2. Clean barriers and post insulators using a clean cloth dipped in isopropyl alcohol.
3. Check all visible fasteners again for condition and tightness.

Note: Do not use any cleaning compounds containing chlorinated hydrocarbons such as trichlorethylene, perchlorethylene or carbon tetrachloride. These compounds will damage the phenylene ether copolymer material used in the barriers and other insulation on the circuit breaker.

Functional tests

Refer to the “Inspection and testing” section of this instruction manual on page 35. Functional tests consist of performing at least three manual spring-charging checks and three automatic spring-charging checks. After these tests are complete, and the springs fully discharged, all fasteners and connections are checked again for tightness and condition.

SIEBREAK AND SIEBREAK-VCB

Overhaul

Introduction

The following procedures along with the troubleshooting charts at the end of this section, provide maintenance personnel with a guide to identifying and correcting possible malfunctions of the type SBVCB vacuum circuit breaker.

Circuit breaker overhaul

The recommended overhaul schedule for a type SBVCB vacuum circuit breaker is 10,000 operations. This assumes that the circuit breaker is operated under "usual service conditions" as discussed in ANSI/IEEE C37.20.3, section 8.1 and ANSI/IEEE C37.04, section 4, and elaborated in ANSI/IEEE C37.010 if the circuit breaker is operated frequently.

When actual operating conditions are more severe, overhaul periods should occur more frequently. The counter on the front panel of the circuit breaker records the number of operations.

Replacement at overhaul

The following components are replaced during an overhaul of the circuit breaker, when required:

- Vacuum interrupters as determined by vacuum-integrity test or after 10,000 operations
- Spring-release coil, 52SRC
- Shunt-trip coil, 52T
- Auxiliary switch.

When these parts are changed, locking devices must also be removed and replaced. These include lock washers, retaining rings, retaining clips, spring pins, cotter pins, etc.

1. Replace vacuum interrupters, instructions follow.
2. Spring-release coil (52SRC) or shunt- trip coil (52T).
   A. Remove two "push on" terminal connections.

DANGER

High-potential tests employ hazardous voltages.

Will cause death, serious injury and property damage.

Read instruction manual. All work must be performed with the circuit breaker completely de-energized and the springs discharged. Limit work to qualified personnel.

   B. Remove two M4 hex-head screws and dismount solenoid.
   C. Install replacement solenoids with two M4 hex-head screws and new lock washers.
   D. Solenoid mounting screws must be installed using thread locking adhesive (Loctite #222, Siemens part 15-133-281-007) and primer (Loctite primer T, Siemens part 15-133-281-005).
   E. Connect wires to coils with new "push on" wire terminals (Siemens part 15-171-600-002).
3. Lubricate operating mechanism in accordance with instructions that follow.
4. When work is finished, operate circuit breaker, CLOSE/OPEN several times, and check that all screw connections are tight.

Vacuum interrupter replacement

Vacuum interrupters for type SBVCB circuit breakers require special expertise for replacement, and must be replaced only by a qualified Siemens field service representative. Accordingly, detailed instructions for replacement of vacuum interrupters are not provided in this instruction manual.

Replacement vacuum interrupters are furnished as a complete assembly, and have been completely tested and mechanically conditioned.

It is recommended one vacuum interrupter be removed and replaced completely rather than removing two or more vacuum interrupters at a time.

Hydraulic shock absorber

The type SBVCB mechanism is equipped with hydraulic shock-absorber and a stop bar that functions when the circuit breaker opens. The shock absorber (61.8) should require no adjustment. However, at maintenance checks, the shock absorber should be examined for evidence of leaking. If evidence of fluid leakage is found, the shock absorber must be replaced to prevent damage to the vacuum-interrupter bellows.

SIEBREAK AND SIEBREAK-VCB

Spare parts

Table 6: Recommended spare parts

Description	Quantity	Part number
Arc-chute assembly	3	15-172-700-001
Quick-break auxiliary blade	3	15-172-700-002
Main blades (600 A) and hardware	3	15-172-700-007[1]
Main blades (1,200 A) and hardware	3	15-172-700-008[1]
Pole assembly (600 A)	1	15-172-700-010[1]
Pole assembly (1,200 A)	1	15-172-700-011[1]
Insulating-link assembly	3	15-172-700-009
Siemens electrical contact lubricant	1	15-172-791-233
Expulsion fuse holder	1[3]	[2]
Expulsion fuse refill	3[3]	[2]
Current-limiting fuse	3[3]	[2]

Footnotes:

1. Interchangeable only in sets.
2. Recommended quantities apply for one to five units.
3. If the switchgear contains fuses, spare parts should be ordered by specifying the manufacturer of the fuse, type of fuse, and voltage/current rating required as in the following example: Mersen, CL-14, 4,160 V, 400E. Refer to Fuse selection guide.

SIEBREAK AND SIEBREAK-VCB

Fuse selection guide

The load-interrupter switch may be unfused or fused to provide fault-current interrupting capacity. To prevent any of the fuse discharge gases from contaminating the switch and arc-chute area, fuses are mounted below the switch.

ANSI E-rated fuses are used for most transformer applications. Maximum fuse size should be determined by verifying the fuse total clearing curve does not exceed the transformer damage curve. Tables show E-rated fuse basic technical data and identify time-current characteristics curves. Other fuse application information for fuses is available at the web sites of the fuse manufacturer.

Footnotes:

1. Fuse CL-14 is Mersen current-limiting type. RBA400 and RBA800 are Eaton expulsion types. 25 kA as Eaton limits peak current to 65 kA. 65 kA/2.6 = 25 kA
2. Equivalent MVA is listed only for informational purposes.
3. Fuse minimum size listed allows transformer magnetizing inrush current. 133-percent fuse allows for 133-percent forced-cooled transformer rating. Maximum fuse size shown is either maximum size for the fuse type or the maximum size fuse recommended.
4. Fuse type RBA800 uses two fuses in parallel with 10-percent reduction in rating to allow for unequal current sharing. 450E uses two 250E fuses, 540E uses two 300E fuses, and 720E uses two 400E fuses.
5. Fuse sizes are E ratings, e.g., 100 designates 100E.

Table 7: Fuse selection guide for transformers from 500 kVA to 6,000 kVA (part 1 of 2)[3, 5]

System voltage	Fuse type[1,4]	Symmetrical interrupting kA	Equivalent MVA[2]	500 kVA			750 kVA			1,000 kVA			1,500 kVA			2,000 kVA		
				Min.	133%	Max.	Min.	133%	Max.	Min.	133%	Max.	Min.	133%	Max.	**Min.**	**133%**	**Max.**
2,400	CL-14	50	260	150	200	250	200	250	300	300	400	500	450	500	600	500	600	600
2,400	RBA400	37.5	155	125	200	250	200	250	300	250	400	400	400	---	400	---	---	---
2,400	RBA800	37.5	155	---	---	---	---	---	---	---	---	---	450	540	720	720	720	720
4,160	CL-14	50	450	80	100	100	125	125	150	150	200	200	250	300	300	400	500	500
4,160	RBA400	37.5	270	80	100	150	125	150	200	150	200	250	250	300	400	300	400	400
4,160	RBA800	37.5	270	---	---	---	---	---	---	---	---	---	---	---	---	---	---	450
4,800	CL-14	50	520	65	80	100	100	125	125	125	200	200	200	250	250	250	400	400
4,800	RBA400	37.5	310	80	100	125	100	125	150	150	200	250	200	250	300	300	400	400
4,800	RBA800	37.5	310	---	---	---	---	---	---	---	---	---	---	---	---	---	---	450
7,200	CL-14	50	620	50	65	80	65	80	100	100	125	125	125	200	200	200	250	300
7,200	RBA400	25[1]	311	50	65	80	65	80	125	100	125	150	150	200	250	200	250	300
7,200	RBA800	25[1]	311	---	---	---	---	---	---	---	---	---	---	---	---	---	---	---
12,470	CL-14	50	1,079	25	40	50	40	50	65	50	65	80	80	100	100	100	125	125
12,470	RBA400	25[1]	540	30	40	65	40	50	80	65	80	100	80	100	125	125	150	150
12,470	RBA800	25[1]	540	---	---	---	---	---	---	---	---	---	---	---	---	---	---	---
13,200	CL-14	50	1,143	25	30	40	40	50	50	50	65	80	80	100	125	100	125	125
13,200	RBA400	25[1]	571	25	30	40	40	50	65	50	65	80	80	100	125	100	125	150
13,200	RBA800	25[1]	571	---	---	---	---	---	---	---	---	---	---	---	---	---	---	---
13,800	CL-14	50	1,195	25	30	40	40	50	50	50	65	80	80	100	100	100	125	150
13,800	RBA400	25[1]	597	25	30	40	40	50	65	50	65	80	80	100	125	100	125	150
13,800	RBA800	25[1]	597	---	---	---	---	---	---	---	---	---	---	---	---	---	---	---

Table 7: Fuse selection guide for transformers from 500 kVA to 6,000 kVA (part 2 of 2)[3, 5]

System voltage	Fuse type[1,4]	Symmetrical interrupting kA	Equivalent MVA[2]	2,500 kVA			3,000 kVA			3,750 kVA			5,000 kVA			6,000 kVA		
				Min.	133%	Max.	Min.	133%	Max.	Min.	133%	Max.	Min.	133%	Max.	Min.	133%	Max.
2,400	---	---	---	---	---	---	---	---	---	---	---	---	---	---	---	---	---	---
2,400	---	---	---	---	---	---	---	---	---	---	---	---	---	---	---	---	---	---
2,400	---	---	---	---	---	---	---	---	---	---	---	---	---	---	---	---	---	---
4,160	CL-14	50	450	400	500	500	---	---	---	---	---	---	---	---	---	---	---	---
4,160	RBA400	37.5	270	400	---	400	---	---	---	---	---	---	---	---	---	---	---	---
4,160	RBA800	37.5	270	---	540	540	540	540	720	---	---	---	---	---	---	---	---	---
4,800	CL-14	50	520	400	450	500	---	---	---	---	---	---	---	---	---	---	---	---
4,800	RBA400	37.5	310	400	400	---	---	---	---	---	---	---	---	---	---	---	---	---
4,800	RBA800	37.5	310	---	---	450	450	540	720	---	---	---	---	---	---	---	---	---
7,200	CL-14	50	620	250	300	300	300	---	300	---	---	---	---	---	---	---	---	---
7,200	RBA400	25[1]	311	250	300	400	400	400	400-	400	---	---	---	---	---	---	---	---
7,200	RBA800	25[1]	311	---	---	---	---	---	---	---	450	540	---	---	---	---	---	---
12,470	CL-14	50	1,079	150	200	200	200	200	250	200	250	300	300	---	---	---	---	---
12,470	RBA400	25[1]	540	150	200	200	200	200	250	200	250	300	300	400	400	400	---	---
12,470	RBA800	25[1]	540	---	---	---	---	---	---	---	---	---	---	---	---	---	450	540
13,200	CL-14	50	1,143	125	150	200	150	200	250	200	250	300	250	300	300	300	---	---
13,200	RBA400	25[1]	571	125	150	200	150	200	200	200	250	300	250	300	400	300	400	---
13,200	RBA800	25[1]	571	---	---	---	---	---	---	---	---	---	---	---	---	---	---	450
13,800	CL-14	50	1,195	125	150	150	150	200	250	200	250	300	250	300	300	---	---	---
13,800	RBA400	25[1]	597	125	150	200	150	200	250	200	250	300	250	300	400	300	400	---
13,800	RBA800	25[1]	597	---	---	---	---	---	---	---	---	---	---	---	---	---	---	450

SIEBREAK AND SIEBREAK-VCB

Troubleshooting

In the event that operating problems are encountered, use the following troubleshooting chart table to isolate the cause of the problem and find the remedy. If the corrective actions given in the chart fail to correct the difficulty, consult your Siemens representative.

The following information is required if it is necessary to contact Siemens relative to the equipment problem.

1. Siemens order number (and part number if available).
2. Switchgear nameplate data.
3. Duty cycle and any details of operation.
4. Length of time in service and approximate total number of operations.
5. Voltage, current and frequency.
6. Description of any problems.
7. Any other pertinent information, such as drawing numbers.

Table 8: Troubleshooting

Sub-assembly	Item	Inspect for
Doors will not close or are out of alignment.	• Enclosure is not bolted down tightly on level surface. • Door hinges not properly adjusted.	• Using level, add shims as necessary, and tighten anchoring bolts. • Remove door hinges. Add or subtract shims as necessary.
Binding of mechanical interlocks.	• Warpage or breakage of housing components. Mechanism components are binding. • Rough handling during transportation or installation.	• Replace mechanism of housing components as required to ensure smooth operation. • Refer to Maintenance section starting on page 54 on adjusting interlock mechanism. • Adjust mechanism and replace broken parts.
Blowing of primary control-transformer fuses.	• Shorted primary winding in control transformer. • Fuse may be open due to rough handling before installation.	• Replace or repair transformer. • Replace fuse.
Overheating.	• Overload. • Poor contact (contact out of alignment). • Connections to switch not of adequate current-carrying capacity. • Contacts burned or pitted. • Bolts and nuts of connections are not tight. • Located in too hot an ambient (104˚F (40 ˚C) maximum) such as too close to a boiler, a furnace, or the like.	• If the switch is overheated because of excess current, one of the two remedies can be adopted: • Replace with a switch of rating adequate for the present or future loads, or • Rearrange circuits to remove excess load. • Adjust contacts. Refer to Maintenance section starting on page 54. • Increase the capacity of the connections by adding conductors or by replacing with heavier conductors. • Contacts should be replaced. • Tighten all bolts and nuts. (Do not exceed torque as per Table 3: Recommended torque values on page 56 by more or less than 10 percent. Over-tightening bolts may cause bolts to exceed their elastic limit, leading to more loosening of the connections.) • Relocate in a cooler place or arrange some means of cooling.

Table 8: Troubleshooting (continued)

Problem	Symptom		Possible causes and remedies
	Closing spring will not automatically charge.		1. Secondary control circuit is de-energized or control circuit fuses are blown. Check and energize or replace if necessary. 2. Damage to wiring, terminals or connectors. Check and repair as necessary. 3. Failure of charging motor (88). Replace if required. 4. Motor cut-off switch LS21 or LS22 fails to operate. Replace if necessary. 5. Mechanical failure of operating mechanism. Check and contact regional service centers, the factory or telephone Siemens field service at 1-800-333-7421 or +1 (423) 262-5700 outside the U.S.
Circuit breaker fails to close.	Closing springs charge, but circuit breaker does not close.	Closing coil or solenoid (52SRC) fails to energize. No sound of circuit breaker closing.	1. Secondary control circuit de-energized or control circuit fuses blown. Correct as indicated. 2. No closing signal. Check for continuity and correct protective relay logic. 3. Failure of anti-pump relay (52Y) contacts 21 to 22, 31 to 32 or 13 to 14. Check and replace as required. 4. Failure of close coil (solenoid) (52SRC). Check and replace as required. 5. Auxiliary switch NC contacts 41 to 42 are open when circuit breaker contacts are open. Check linkage and switch. Replace or adjust as necessary. 6. Spring-charged switch LS9 NO contacts remain open after springs are charged. Check and replace as required.
		Closing coil energizes. Sound of circuit breaker closing is heard but circuit breaker contacts do not close.	Mechanical failure of operating mechanism. Check and contact regional service centers, the factory or telephone Siemens field service at +1 (800) 347-6659 or +1 (423) 262-5700 outside the U.S.
Nuisance or false close.	Electrical problem.		1. Nuisance or false closing signal to secondary disconnect 13. Check protective relay logic. Correct as required. 2. Closing coil (52SRC) terminal A2 is shorted-to-ground. Check to determine if problems are in wiring or coil. Correct as required.
	Mechanical problem.		Mechanical failure of operating mechanism. Check and contact regional service centers, the factory or telephone Siemens field service at +1 (800) 347-6659 or +1 (423) 262-5700 outside the U.S.
Nuisance or false trip.	Electrical problem.		1. Tripping signal remains energized. 2. Check for improper protective relay logic.
	Mechanical problem.		Mechanical failure of operating mechanism. Check and contact regional service centers, the factory or telephone Siemens field service at +1 (800) 347-6659 or +1 (423) 262-5700 outside the U.S.

Table 8: Troubleshooting

Sub-assembly	Item	Inspect for
Circuit breaker will not trip.	Tripping coil or solenoid (52T) does not energize. There is no tripping sound.	1. Secondary control power is de-energized or control power fuses are blown. Correct as indicated. 2. Damage to wiring, terminals or connectors. Check and repair as necessary. 3. No tripping signal. Check for continuity and correct protective relay logic. 4. Failure of trip coil (52T). Check and replace if necessary. 5. Auxiliary switch NO contacts 23 to 24 or 33 to 34 are open when circuit breaker is closed. Check linkage and switch. Replace or adjust as necessary.
	Tripping coil (52T) energizes. No tripping sound is heard, and circuit breaker contacts do not open. In other words, they remain closed.	Failure of tripping spring or its mechanical linkage. Check and replace if required.
	Tripping coil (52T) energizes. Tripping sound is heard, but circuit breaker contacts do not open.	1. Mechanical failure of operating mechanism. Check and contact regional service centers, the factory or telephone Siemens field service at +1 (800) 347-6659 or +1 (423) 262-5700 outside the U.S. 2. One or more of the vacuum interrupters are held closed. Check and replace as necessary.

SIEBREAK AND SIEBREAK-VCB

Appendix

Table 9: Circuit breaker control data

Control voltages ANSI/IEEE C37.06			Close coil		Trip coil		Spring-charging motor					
Nominal	Range		25 kA	40 kA	25 kA	40 kA	Run (average)		Inrush (peak)		Charging	
							25 kA	40 kA	25 kA	40 kA	25 kA	40 kA
	Close	Trip	A[1]	A[1]	A[1]	A[1]	A[1]	A[1]	A	A	Seconds	Seconds
48 Vdc	36-56	28-56	0.2	11.4	8.9	11.4	2.6	8.0	6.1	25.0	11	10
125 Vdc	100-140	70-140	3.9	2.1	3.8	4.8	1.2	4.0	5.7	18.0	12	10
250 Vdc	200-280	140-280	1.8	2.1	1.8	4.2	0.6	2.0	2.8	10.0	12	10
120 Vac	104-127	----[3]	8.7	2.0	----[2,3]	----[2,3]	2.6	6.0	7.3	----[3]	10	10
240 Vac	208-254	----[3]	3.4	2.0	----[2,3]	----[2,3]	2.6	3.0	3.3	----[3]	10	10

Footnotes:

1. Current at nominal voltage.
2. Capacitor trip.
3. ----means this selection is not available.

Table 10: Interrupting capacity auxiliary switch contacts[2]

Type switch	Continuous current	Control circuit voltage				
Non-inductive	**A**	**120 Vac**	**240 Vac**	**48 Vdc**	**125 Vdc**	**250 Vdc**
Circuit breaker	10	10	5	10/30[1]	9.6	4.8
Inductive	**A**	**120 Vac**	**240 Vac**	**48 Vdc**	**125 Vdc**	**250 Vdc**
Circuit breaker	10	6	3	10	6	3

Footnotes:

1. Two contacts in series.
2. All switch contacts are non-convertible.

Table 11: Circuit breaker operating times

Spring charging time		25 kA	40 kA
Close time from energizing close coil at rated control voltage to contact touch (last pole)		<60 ms	65 ms
Opening time from energization trip coil at rated control voltage to contact part (last pole), not including arcing time	**Three-cycle interrupting time (50 ms)**	<33	

These ratings are in accordance with:

- ANSI/IEEE C37.04-1999 Standard Rating Structure for AC High-Voltage Circuit Breakers
- ANSI/IEEE C37.06-2009 AC High-Voltage Circuit Breakers Rated on a Symmetrical Current Basis - Preferred Ratings and Related Required Capabilities for Voltages Above 1,000 Volts
- ANSI/IEEE C37.09-1999 Standard Test Procedure for AC High-Voltage Circuit Breakers Rated on a Symmetrical Current Basis
- ANSI/IEEE C37.010-1999 Application Guide for AC High-Voltage Circuit Breakers Rated on a Symmetrical Current Basis.

Table 12: SIEBREAK vacuum circuit breaker ratings

Circuit breaker type[1]	Maximum design voltage (V)[2] kV rms	Voltage range factor (K)[3]	Withstand voltage levels		Continuous current A rms	Short circuit (I)[4,5,7] kA rms sym	Interrupting time[6] ms/cycles
			Power frequency kV rms	Lighting impulse (BIL) kV peak			
05-SBVCB-25-xxxx-65	4.76	1.0	19	16	600, 1,200	25	50/3
05-SBVCB-40-xxxx-104	4.76	1.0	19	60	600, 1,200	38[7]	50/3
15-SBVCB-25-xxxx-65	15.0	1.0	36	95	600, 1,200	25	50/3
15-SBVCB-40-xxxx-104	15.0	1.0	36	95	600, 1,200	38[7]	50/3

Circuit breaker type[1]	Permissible tripping delay (Y) sec	Maximum symmetrical interrupting (I) kA rms sym	%dc component %	Short-time current (I) (three seconds) kA rms	Closing and latching (momentary)	
					Asymmetrical (1.55 x I) kA rms	Peak (2.6 x I) kA peak
05-SBVCB-25-xxxx-65	2	25	47	25	39	65
05-SBVCB-40-xxxx-104	2	38[7]	47	38[7]	65[7]	104[7]
15-SBVCB-25-xxxx-65	2	25	47	25	39	65
15-SBVCB-40-xxxx-104	2	38[7]	47	38[7]	65[7]	104[7]

Footnotes:

1. "xxxx" in type designation refers to the continuous current rating 0600 A or 1,200 A, as appropriate.
2. Maximum design voltage for which the circuit breaker is designed and the upper limit for operation.
3. K is listed for information purposes only. For circuit breakers rated on a "constant kA" ratings basis, the voltage range factor is 1.0.
4. All values apply to polyphase and line-to-line faults.
5. Standard duty cycle is O - 0.3s - CO - 3 min. - CO.
6. Standard rating interrupting time is three-cycles (50 ms).
7. 40 kA circuit breaker values are limited to the capabilities of the load-interrupter switch. Closing and latching current is that of the circuit breaker and is based on the load-interrupter switch being in the CLOSED position.

Legal Manufacturer

Siemens Industry, Inc.
7000 Siemens Road
Wendell, North Carolina 27591
United States of America

Telephone: +1 (800) 347-6659
www.usa.siemens.com/siebreak

Order No. EMMS-T40051-05-4AUS

This document contains a general description of available technical options only, and its effectiveness will be subject to specific variables including field conditions and project parameters. Siemens does not make representations, warranties, or assurances as to the accuracy or completeness of the content contained herein. Siemens reserves the right to modify the technology and product specifications in its sole discretion without advance notice.

© 2021 by Siemens Industry, Inc.